Installation Manual
Air Handler
EVOX Gen2 XTREME HEAT

For 18,000 - 60,000 BTU Systems

NOTE

Read the entire instruction manual before starting the installation. Images are for illustration purposes only. Actual models may differ slightly.

Units Covered In This Manual

SYSTEM TONS	BTUH	VOLTAGE/ PHASE	AIR HANDLER MODEL
1.5	18,000	115/208/230-1	MAUHE-H18B-2A
2.0	24,000	115/208/230-1	MAUHE-H24B-2A
2.5	30,000	115/208/230-1	MAUHE-H30B-2A
3.0	36,000	115/208/230-1	MAUHE-H36B-2A
4.0	48,000	115/208/230-1	MAUHE-H48B-2A
5.0	60,000	115/208/230-1	MAUHE-H60B-2A

AHRI CERTIFIED™ www.ahridirectory.org

C ETL LISTED US

Manufacturer reserves the right to change, at any time, specifications and designs without notice and without obligations.

Table of Contents

Safety Considerations **3**
Table S-1: Allowed Static Pressure Ranges 4
Table S-2: Approved Matchups 5
Table S-3: Minimum Room Area Requirements 5
Table S-4: Minimum Leak Airflow 5
Table S-5: Explanation of symbols displayed on the indoor unit or outdoor unit 9
Installation Accessories **10**
Table A-1: Included Accessories 10
Table A-2: Optional Accessories 10
Product Overview **11**
Fig. P-1: External Component Location 11
Fig. P-2: Internal Component Location 11
Dimensions **12**
Table D-1: Dimensions 12
Fig. D-1: Unit Dimensions 12
Fig. D-2: Filter Dimensions 12
Table D-2: Recommended Filter Sizes 12
Clearances **13**
Fig. C-1: Clearance Dimensions 13
Fig. C-2: Duct Clearances 13
Fig. C-3: Installation Direction Options 13
Installation Requirements **14**
Fig. IR-1: Air Outlet Location 14
Fig. IR-2: Air Handler Layout 14
Fig. IR-3: Air Handler Vertical Installation 15
Fig. IR-4: Multi-Position Installation Options 15
Installation **16**
Step 1 - Mounting the Unit 16
Fig. 1-1: Remove Upper Front Panel 16
Fig. 1-2: Remove the Filter 16
Fig. 1-3: Remove Evaporator Cover Plate 16
Fig. 1-4: Unplug the Sensors from the Board 16
Fig. 1-5: T1 Sensor Location by Model 17
Fig. 1-6: Remove the Sensor Wire Ties 17
Fig. 1-7: Remove and Rotate Drain Pan 17
Fig. 1-8: Adjust Mounting Parts Position 18
Fig. 1-9: Reinstall Evaporator and Drain Pan 18
Fig. 1-10: Reinstall Sensor Plugs and EEV 18
Fig. 1-11: Assembled Evaporator 19
Fig. 1-12: Attach the Sensor 19
Fig. 1-13: Reinstall the Cover Plate 19
Fig. 1-14: Reassemble Upper Cover 19
Fig. 1-15: Reinstall Filter and Cover Plate 19
Step 2 - Drain Piping 20
Fig. 2-1: Vertical discharge 20
Fig. 2-2: Air Vent Arrangement 20
Step 3 - Refrigerant Piping Connections 21
Table 3-1: Piping Sizes 21
Fig. 3-1: Correct Pipe Cutting 22
Fig. 3-2: Reamer Tool 22
Fig. 3-3: Copper pipe and flare nut 22
Fig. 3-4: Flare Form 22
Fig. 3-5: Flare Shape 22
Table 3-2: Flare Dimensions/Tightening Torque 23
Fig. 3-6: Align the center of the two pipes 23
Fig. 3-7: Spanner and Backup Wrench 23
Fig. 3-8: Bend the Tubing 23
Confirmation of Indoor Unit 25
Table CIU-1: Units Without Electric Heat 25
Step 4 - Power Wiring Connections 25
Fig. 4-1: Wiring Overview 25
Fig. 4-2: Remove Electrical Cover 26
Fig. 4-3: Field Wiring Conduit Location 26
Fig. 4-6: Power Wiring Location 27
Step 5 - Specific Wiring Methods 27
Table 5-1: Communication Wiring Sizes 27
Table 5-2: Wiring Color Guide 28
Scenario 1: EVOX Heat Pump and Air Handler 3rd Party 24 V Thermostat 29
Fig. 5-1: Scenario 1 Wiring Diagram and Dip Switch Settings 29
Scenario 2: EVOX Heat Pump, Air Handler, and RS485 Communication 29
Fig. 5-2: Scenario 2 Wiring Diagram and Dip Switch Settings 29
Scenario 3: Self-Adapt Mode with 3rd Party Equipment 30
Fig. 5-3: Scenario 3 Wiring Diagram and Dip Switch Settings 30
24 V Connection Diagrams 30
Table 5-4: Control Logic 30
Fig. 5-4: Never Connect 24 V to S1-S2 31
Fig. 5-5: Wiring for 4H and 2C Thermostat 31
Fig. 5-6: Wiring for 3H and 2C Thermostat 31
Fig. 5-7: Wiring for 3H and 1C Thermostat 31
Fig. 5-8: Wiring for 2H and 2C Thermostat No Auxilary Heat 31
Fig. 5-9: Wiring for 3H and 2C Thermostat 31
Fig. 5-10: Wiring for 2H and 1C Thermostat 31
Fig. 5-11: Wiring for 1H and 1C Thermostat 32
Fig. 5-12: Wiring for 1H and 1C Thermostat 32
Optional function wiring 32
Fig. 5-13: Condensate Overflow Location 32
Fig. 5-14: Alarm Wiring 32
Fig. 5-15: Humidifier Wiring 32
Fig. 5-16: Clean Air Wiring 33
Fig. 5-17: Interface Wiring Locations 33
DIP switch definitions 34
Fig 5-18: Dip Switch Layout 34
Fig. 5-19: 24 V Thermostat Settings 35
Table 5-5: Function combination table of SW1-1 and SW1-4 35
Table 5-6: Indoor Unit Dial Code 35
Table 5-7: Determined by dial code SW8 1-10K 2-5.1K 36
Table 5-8: Table A 37
Step 6 - Air Evacuation 37
Step 7 - Insulate the Piping 37
Table 7-1: Recommended Insulation Thickness 37
Fig. 7-1: Insulate Both Pipes Separately 37
Fig. 7-2: Insulate All Connections 37
Test Run **38**
Appendix **39**
Table AP-1: Air Volume Table 39
Table AP-2: 24 V Signal Chart 41
Indoor Unit Diagnostic Guide 42
Table AP-3: Indoor Unit Diagnostic Codes 42
Installation Guide For AHU Using 115 V Power Supply 43
Fig. AP-1: Remove Upper Cover 43
Fig. AP-2: Switch the Red Wire to 115 V 43
Fig. AP-3: Unplug Sensors From Contol Board 43
Fig. AP-4: Remove the Conrol Box 43
Fig. AP-5: Unplug CN12 Connector 43
Fig. AP-6: Remove the Red Connector 43
Fig. AP-7: Connect the Accessory Connection 44
Fig. AP-8: Replace the Control Box and Reattach the Sensors 44
Installation Of Electric Auxiliary Heat Module 44
Table AP-4: Electric Auxilary Heat Accessories 44
Table AP-5: Model Size Selection Chart 44
Fig. AP-9: Remove The Upper Cover 45
Fig. AP-10: Remove The Upper Cove Knockout 45
Fig. AP-11: Remove The Heating Cover 45
Fig. AP-12: Install The EAH Assembly 45
Fig. AP-13: Tighten The Screws 46
Fig. AP-14: Install The Breaker Cover 46
Table AP-8: Relay And Breaker Specifications 46
Table AP-9: Electric Heat Kit Data 47
Trademarks Copyrights & Legal Statement 47
Disposal and Recycling 47
Data Protection Notice 47

Safety Considerations

⚠ WARNING

Hazards or unsafe practices that may result in severe personal injury or death.

⚠ CAUTION

Hazards or unsafe practices may result in minor personal injury or property damage. Carefully follow the precautions because they are essential to guarantee the safety of the equipment.

⚠ DANGER

Identifies the most serious hazards which will result in severe personal injury or death.

NOTE

A property-damage-only hazard, meaning no personal injury is possible.

IMPORTANT

Is used to highlight suggestions which will result in enhanced installation, reliability, or operation.

⚠ WARNING

State of California Proposition 65 Warning (US Only)
This product contains chemicals known to the State of California to cause cancer, birth defects, or other reproductive harm.

⚠ WARNING

Improper installation, adjustment, alteration, service, maintenance, or use can cause an explosion, fire, electrical shock, or other conditions that may cause death, personal injury, or property damage. Consult a qualified installer, service agency, distributor, or branch for information or assistance. The qualified installer or agency must use factory-authorized kits or accessories when modifying this product. Refer to the individual instructions packaged with kits or accessories when installing.

IMPORTANT

Follow all safety codes. Wear safety glasses, protective clothing, and work gloves. Have a fire extinguisher available. Read these instructions thoroughly and follow all warnings or cautions in the literature and labels attached to the unit. Consult local building codes and the current editions of the National Electrical Code (NEC) NFPA 70.

IMPORTANT

In Canada, refer to the current editions of the Canadian Electrical Code CSA C22.1. Follow the safety information.

⚠ WARNING

This appliance is not intended for use by persons (including children) with reduced physical, sensory or mental capabilities, or lack of experience and knowledge, unless they have been given supervision or instruction concerning use of the appliance by a person responsible for their safety. Children should be supervised to ensure that they do not play with the appliance.

⚠ WARNING

ELECTRICAL WARNINGS

- Only use the specified wire. If the wire is damaged, it must be replaced by the manufacturer, service agent, or similarly qualified persons to avoid a hazard.
- The product must be properly grounded at the time of installation, or electric shock may occur.
- For all electrical work, follow all local and national wiring standards, regulations, and the Installation Manual. Connect cables tightly and clamp them securely to prevent external forces from damaging the terminal. Improper electrical connections can overheat, cause fire, and may also cause shock. All electrical connections must be made according to the Electrical Connection Diagram located on the panels of the indoor and outdoor units.
- All wiring must be properly arranged to ensure that the control board cover can close properly. If the control board cover is not closed properly, it can lead to corrosion and cause the connection points on the terminal to heat up, catch fire, or cause electrical shock.
- External disconnect shall be incorporated in installed wiring as per national and local codes.
- **DO NOT** share the electrical outlet with other appliances. The unit must be installed on a dedicated electrical circuit.

⚠ WARNING

WARNINGS FOR PRODUCT INSTALLATION

- Turn off the air conditioner and disconnect the power before performing any installation or repairs. Failure to do so can cause electric shock.
- Installation must be performed by an authorized dealer or specialist according to the installation instructions. Improper installation can cause water damage, electrical hazards, or fire. Contact an authorized service technician for repair or maintenance.
- This appliance shall be installed in accordance with national wiring regulations. Only use the included accessories, parts, and specified parts for installation.
- Using non-standard parts can cause water leakage, electrical shock, and fire, and can cause the unit to fail.
- Install the unit in a firm location that can support the unit's weight. If the chosen location cannot support the unit's weight, or the installation is not done properly, the unit may drop and cause serious injury and damage.
- Install drainage piping according to the instructions in this manual. Improper drainage may cause water damage to your home and property.
- For units that have an auxiliary electric heater, do not install the unit within 1 m (3 ft.) of any combustible materials.

- For the units that have a wireless network function, USB device access, replacement, and maintenance operations must be carried out by professional staff.
- Do not install the unit in a location that may be exposed to combustible gas leaks. **If combustible gas accumulates around the unit, it may cause fire.**

- Do not turn on the power until all work has been completed.
- **When moving or relocating the air conditioner**, consult experienced service technicians for disconnection and reinstallation of the unit.
- How to install the appliance to its support, please read the information for details in the "indoor unit installation" and "outdoor unit installation" sections.

TAKE NOTE OF FUSE SPECIFICATIONS

The air conditioner's circuit board (PCB) may be designed with a fuse to provide overcurrent protection. This fuse must be replaced with an identical component.

The specifications of the fuse are printed on the circuit board, for example: T3.15 AL/250 VAC, T5 AL/250 VAC, T3.15 A/250 VAC, T5 A/250 VAC, T20 A/250 VAC, T30 A/250 VAC, etc.

The specifications of the fuse, if equipped, are printed on the circuit board, examples of such are T5 A/250 VAC and T10 A/250 VAC.

NOTE

Only the blast-proof ceramic fuse can be used.

⚠ WARNING

WARNINGS FOR CLEANING AND MAINTENANCE

- Turn off the device and disconnect the power before cleaning. Failure to do so can cause electrical shock.
- Do not clean the air conditioner with excessive amounts of water.
- Do not clean the air conditioner with combustible cleaning agents. Combustible cleaning agents can cause fire or deformation.

⚠ WARNING

USING FLAMMABLE REFRIGERANT

1. Installation (Space)
   - That the installation of pipe work shall be kept to a minimum.
   - That pipe work shall be protected from physical damage.
   - Where refrigerant pipes shall comply with national gas regulations.
   - That mechanical connections shall be accessible for maintenance purposes.
   - In cases that require mechanical ventilation, ventilation openings shall be kept clear of obstruction.
   - When disposing of the used product, it must be based on national regulations, and properly processed.
2. Service
   - Any person who is involved with working on or breaking into a refrigerant circuit should hold a currently valid certificate from an industry-accredited assessment authority, which authorizes their competence to handle refrigerants safely following an industry-recognized assessment specification.
3. Maintenance and repair requiring the assistance of other skilled personnel shall be carried out under the supervision of a person competent in the use of flammable refrigerants.
4. Do not use means to accelerate the defrosting process or to clean, other than those recommended by the manufacturer.
5. The appliance shall be stored in a room without continuously operating ignition sources (for example: open flames, an operating gas appliance, or an operating electric heater).
6. Be careful that foreign matter(oil, water,etc) does not enter the piping. Also, when storing the piping, securely seal the opening by pinching, taping, etc.
7. Do not pierce or burn.
8. Be aware that refrigerants may not contain an odor.
9. All working procedures that affect safety means shall only be carried out by competent technicians.
10. Appliance shall be stored in a well-ventilated area where the room size corresponds to the room area as specified for operation.
11. The appliance shall be stored to prevent mechanical damage from occurring.
12. Joints shall be tested with detection equipment with a capability of 0.2 oz./year of refrigerant or better, with the equipment in standstill and under operation or pressure of at least these standstill or operation conditions after installation. Detachable joints shall NOT be used in the indoor side of the unit (brazed, welded joints could be used).

NOTE

Fluorinated Gasses

- This air conditioning unit contains fluorinated greenhouse gases. For specific information on the type of gas and its amount, please refer to the relevant label on the unit itself or the "Owner's Manual—Product Fiche" in the outdoor unit's packaging.
- A certified technician must perform installation, service, maintenance, and repair to this unit.
- A certified technician must perform product uninstallation and recycling.
- Proper record-keeping of all checks is strongly recommended when the unit is checked for leaks.

The allowed static pressure range of the air conditioner on the side refers to Table S-1.

Table S-1: Allowed Static Pressure Ranges

Model	18-24K	30-36K	48-60K
Pressure	0-0.8 in. wc. (0-200 Pa)	0-0.8 in. wc. (0-200 Pa)	0-0.8 in. wc. (0-200 Pa)

Note: The maximum functional total external static pressure cannot exceed the above range values. The airflow will be reduced significantly if the external static is beyond the maximum value. System design should allow for the increased resistance of filters as they become dirty.

For R454B refrigerant charge amount and minimum room area:

The machine you purchased may be one of the types in the table below. The indoor and outdoor units are designed to be used together, and the indoor unit is connected via an air duct system to one or more rooms. Please check the

machine you purchased. The height of the room cannot be less than 7.3 ft./2.2 m, and the minimum room area for operating or storage should be as specified in the following table:

Table S-2: Approved Matchups

Product Type	Capacity (208/230 V)	Air Handler Unit	Outdoor Unit
Gen 2 Regular Heat AHU	18K	MAUHE-H18B-2A	MO1BE-H18B-2A
	24K	MAUHE-H24B-2A	MO1BE-H24B-2A
	30K	MAUHE-H30B-2A	MO1BE-H30B-2A
	36K	MAUHE-H36B-2A	MO1BE-H36B-2A
	48K	MAUHE-H48B-2A	MO1BE-H48B-2A
	60K	MAUHE-H60B-2A	MO1BE-H60B-2A
Gen 2 Extreme Heat AHU	18K	MAUHE-H18B-2A	MO1HE-H18B-2A
	24K	MAUHE-H24B-2A	MO1HE-H24B-2A
	30K	MAUHE-H30B-2A	MO1HE-H30B-2A
	36K	MAUHE-H36B-2A	MO1HE-H36B-2A MO1SE-H36B-2A
	42K	MAUHE-H48B-2A	MO1HE-H42B-2A
	48K	MAUHE-H48B-2A	MO1HE-H48B-2A
	48K	MAUHE-H60B-2A	MO1SE-H48B-2A
	60K	MAUHE-H60B-2A	MO1HE-H60B-2A

Table S-3: Minimum Room Area Requirements

Mc or MREL [oz./kg]	TAmin [ft.^{2}/m^2]	Mc or MREL [oz./kg]	TAmin [ft.^{2}/m^2]	Mc or MREL [oz./kg]	TAmin [ft.^{2}/m^2]	Mc or MREL [oz./kg]	TAmin [ft.^{2}/m^2]
<=62.7/1.776	12/1.1	134/3.8	126/11.67	211.6/6.0	198/18.43	289.2/8.2	271/25.18
63.5/1.8	60/5.53	141.1/4	132/12.29	218.7/6.2	205/19.04	296.3/8.4	278/25.8
70.5/2	66/6.14	148.1/4.2	139/12.9	225.8/6.4	212/19.66	303.4/8.6	284/26.41
77.6/2.2	73/6.76	155.2/4.4	145/13.51	232.8/6.6	218/20.27	310.4/8.8	291/27.63
84.6/2.4	79/7.37	162.2/4.6	152/14.13	239.9/6.8	225/20.88	317.5/9.0	298/27.64
91.7/2.6	86/7.99	169.3/4.8	159/14.74	246.9/7.0	231/21.5	324.5/9.2	304/28.26
98.8/2.8	93/8.6	176.4/5	165/15.36	254/7.2	238/22.11	331.6/9.4	311/28.87
105.8/3	99/9.21	183.4/5.2	172/15.97	261/7.4	245/22.73	338.6/9.6	317/29.48
112.9/3.2	106/9.83	190.5/5.4	179/16.58	268.1/7.6	251/23.34	345.7/9.8	324/30.10
119.9/3.4	112/10.44	197.5/5.6	185/17.2	275.1/7.8	258/23.96	352.7/10.0	331/30.71
127/3.6	119/11.06	204.6/5.8	192/17.81	282.2/8.0	264/24.57		
Area formula	**TAmin** is the required minimum area of the total conditioned space connected by air ducts in ft.^{2}/m^2 **Mc** is the actual refrigerant charge in the system in oz/kg **MREL** is the refrigerant releasable charge in oz./kg **hinst** is the height of the bottom of the appliance relative to the floor of the room after installation. **WARNING:** The minimum room area or minimum room area of conditioned space is based on releasable charge and total system refrigerant charge.						

NOTE

If the actual room size does not fit the abovementioned conditions, please refer to the upper-level condition. Ex. we provide suggestions for a room size of 400 sq. ft., if the room size is 450 sq. ft., please refer to the 500 sq. ft. requirement. When the unit detects a refrigerant leak, the minimum airflow of the indoor unit is as indicated in Table S-4:

Table S-4: Minimum Leak Airflow

Model	18K	24K	30K	36K	48K	60K
Nominal air volume	400 CFM (680 m^3/h)	400 CFM (680 m^3/h)	447 CFM (760 m^3/h)	541 CFM (920 m^3/h)	706 CFM (1,200 m^3/h)	824 CFM (1,400 m^3/h)

1. Installation

- Any person who is involved with working on or breaking into a refrigerant circuit should hold a current valid certificate from an industry-accredited assessment authority, which authorizes their competence to handle refrigerants safely in accordance with an industry-recognized assessment specification.
- Maintenance and repair requiring the assistance of other skilled personnel shall be carried out under the supervision of the person competent in the use of flammable refrigerants.
- That the installation of pipe work shall be kept to a minimum.
- That pipe work shall be protected from physical damage.
- Where refrigerant pipes shall comply with national gas regulations.
- That mechanical connections shall be accessible for maintenance purposes.
- Be more careful that foreign matter (oil, water, etc.) does not enter the piping. Also, when storing the piping, securely seal the opening by pinching, taping, etc.
- All working procedures that affect safety means shall only be carried out by competent technicians.
- Appliance shall be stored in a well-ventilated area where the room size corresponds to the room area as specified for operation.
- Joints shall be tested with detection equipment with a capability of 0.2 oz./year of refrigerant or better, with the equipment in a standstill and under operation or under pressure of at least these standstill or operation conditions after installation. Detachable joints should NOT be used on the indoor side of the unit (brazed, welded joints could be used).
- In cases that require mechanical ventilation, ventilation openings shall be kept clear of obstruction.
- LEAK DETECTION SYSTEM installed. The unit must be powered except for service.
- For the unit with a refrigerant sensor, when the refrigerant sensor detects refrigerant leakage, the indoor unit will display an error code and emit a buzzing sound, the compressor of the outdoor unit will immediately stop, and the indoor fan will start running. The service life of the refrigerant sensor is 15 years. When the refrigerant sensor malfunctions, the indoor unit will display the error code "FHCC".
- The refrigerant sensor cannot be repaired and can only be replaced by the manufacturer. It shall only be replaced with the sensor specified by the manufacturer.

2. When a FLAMMABLE REFRIGERANT is used, the requirements for installation space of appliance and/or ventilation requirements are determined according to

- the mass charge amount (M) used in the appliance,
- the installation location,
- the type of ventilation of the location or the appliance.
- piping material, pipe routing, and installation shall include protection from physical damage in operation and service, and comply with national and local codes and standards, such as ASHRAE 15, IAPMO Uniform Mechanical Code, ICC International Mechanical Code, or CSA B52. All field joints shall be accessible for inspection before being covered or enclosed.

- that protection devices, piping, and fittings shall be protected as far as possible against adverse environmental effects, for example, the danger of water collecting and freezing in relief pipes or the accumulation of dirt and debris;
- that piping in refrigeration systems shall be so designed and installed to minimize the likelihood of hydraulic shock damaging the system;
- that steel pipes and components shall be protected against corrosion with a rustproof coating before applying any insulation;
- that precautions shall be taken to avoid excessive vibration or pulsation;
- the minimum floor area of the room shall be mentioned in the form of a table or a single figure without reference to a formula;
- after completion of field piping for split systems, the field pipework shall be pressure tested with an inert gas and then vacuum tested before refrigerant charging, according to the following requirements:
  a. The minimum test pressure for the low side of the system shall be the low side design pressure and the minimum test pressure for the high side of the system shall be the high side design pressure, unless the high side of the system can not be isolated from the low side of the system in which case the entire system shall be pressure tested to the low side design pressure.
  b. During the pressure test, the system shall maintain the pressure for at least 1 h with no decrease of pressure indicated by the test gauge, with test gauge resolution not exceeding 5% of the test pressure.
  c. During the evacuation test, after achieving a vacuum level specified in the manual or less, the refrigeration system shall be isolated from the vacuum pump and the pressure shall not rise above 1500 microns within 10 min. The vacuum pressure level shall be specified in the manual and shall be the lessor of 500 microns or the value required for compliance with national and local codes and standards, which may vary between residential, commercial, and industrial buildings.
- field-made refrigerant joints indoors shall be tightness tested according to the following requirements: The test method shall have a sensitivity of 5 grams per year of refrigerant or better under a pressure of at least 0,25 times the maximum allowable pressure. No leak shall be detected.

3 . Qualification of workers

Any maintenance, service, and repair operations must require the qualification of the working personnel. Every working procedure that affects safety means shall only be carried out by competent technicians who joined the training and achieved competence should be documented by a certificate. The training of these procedures is carried out by national training organizations or manufacturers that are accredited to teach the relevant national competency standards that may be set in legislation. All training shall follow the ANNEX HH requirements of UL 60335-2-40 4th Edition.

Examples of such working procedures are:

- breaking into the refrigerating circuit;
- opening of sealed components;
- opening of ventilated enclosures.

4. Checks to the area

Before beginning work on systems containing flammable refrigerants, safety checks are necessary to ensure that the risk of ignition is minimized. For repair to the refrigerating system, the following precautions shall be complied with before conducting work on the system.

5. Work procedure

Works shall be undertaken under a controlled procedure to minimize the risk of flammable gas or vapor being present while the work is being performed.

6. General work area

All maintenance staff and others working in the local area should be instructed on the nature of the work being carried out. Work in confined spaces shall be avoided.

7. Checking for the presence of refrigerant

The area should be checked with an appropriate refrigerant detector before and during work, to ensure the technician is aware of potentially flammable atmospheres. Ensure that the leak detection equipment being used is suitable for use with flammable refrigerants, i.e. no sparking, adequately sealed or intrinsically safe.

8. Presence of fire extinguisher

If any hot work is to be conducted on the refrigeration equipment or any associated parts, appropriate fire extinguishing equipment shall be available to hand. Have a dry powder or CO_2 fire extinguisher adjacent to the charging area.

9. No ignition sources

No person carrying out work on a REFRIGERATING SYSTEM which involves exposing any pipe work shall use any sources of ignition in such a manner that it may lead to the risk of a fire or explosion. All possible ignition sources, including cigarette smoking, should be kept sufficiently far away from the site of installation, repair, removal, and disposal, during which refrigerant can be released into the surrounding space. Before work takes place, the area around the equipment is to be surveyed to make sure that there are no flammable hazards or ignition risks. “No Smoking” signs shall be displayed.

10. Ventilated area

Ensure that the area is in the open or that it is adequately ventilated before breaking into the system or conducting any hot work. A degree of ventilation shall continue during the period that the work is carried out. The ventilation should safely disperse any released refrigerant and preferably expel it externally into the atmosphere.

11. Check the refrigeration equipment

Where electrical components are being changed, they shall be fit for the purpose and to the correct specification. At all times the manufacturer’s maintenance and service guidelines shall be followed. If in doubt consult the manufacturer’s technical department for assistance. The following checks shall be applied to installations using FLAMMABLE REFRIGERANTS:

- the actual refrigerant charge is in accordance with the room size within which the refrigerant-containing parts are

installed;

- the ventilation machinery and outlets are operating adequately and are not obstructed;
- if an indirect refrigerating circuit is being used, the secondary circuits shall be checked for the presence of refrigerant;
- marking to the equipment continues to be visible and legible, marking and illegible signs shall be corrected;
- refrigeration pipe or components are installed in a position where they are unlikely to be exposed to any substance that may corrode refrigerant-containing components unless the components are constructed of materials that are inherently resistant to being corroded or are suitably protected against being so corroded.

12. Checks to electrical devices

Repair and maintenance of electrical components shall include initial safety checks and component inspection procedures. If a fault exists that could compromise safety, then no electrical supply shall be connected to the circuit until it is satisfactorily dealt with. If the fault cannot be corrected immediately it is necessary to continue operation, and adequate temporary solution shall be used.

This shall be reported to the owner of the equipment so all parties are advised.

Initial safety checks shall include:

that capacitors are discharged: this shall be done safely to avoid the possibility of sparking;

that no live electrical components and wiring are exposed while charging, recovering, or purging the system;

that there is continuity of earth bonding;

Sealed electrical components shall be replaced if it's damaged; Intrinsically safe components must be replaced if it's damaged.

13. Wiring

Check that cabling will not be subject to wear, corrosion, excessive pressure, vibration, sharp edges, or any other adverse environmental effects. The check shall also take into account the effects of aging or continual vibration from sources such as compressors or fans.

14. Detection of flammable refrigerants

Under no circumstances shall potential sources of ignition be used in the search for or detection of refrigerant leaks. A halide torch(or any other detector using a naked flame) shall not be used.

The following leak detection methods are deemed acceptable for refrigerant systems. Electronic leak detectors may be used to detect refrigerant leaks but, in the case of FLAMMABLE REFRIGERANTS, the sensitivity may not be adequate, or may need re-calibration. (Detection equipment shall be calibrated in a refrigerant-free area.) Ensure that the detector is not a potential source of ignition and is suitable for the refrigerant used. Leak detection equipment shall be set at a percentage of the LFL of the refrigerant and shall be calibrated to the refrigerant employed, and the appropriate percentage of gas (25 % maximum) is confirmed. Leak detection fluids are also suitable for use with most refrigerants but the use of detergents containing chlorine shall be avoided as the chlorine may react with the refrigerant and corrode the copper pipe-work.

NOTE

Examples of leak-detection fluids are

- bubble method,
- fluorescent method agents.

If a leak is suspected, all naked flames shall be removed/extinguished.

If leakage of refrigerant is found which requires brazing, all of the refrigerant shall be recovered from the system, or isolated (using shut-off valves) in a part of the system remote from the leak. See the following instructions for the removal of refrigerant.

15. Removal and evacuation

When breaking into the refrigerant circuit to make repairs - or for any other purpose conventional procedures shall be used. However, for flammable refrigerants best practice must be followed since flammability is a consideration.

The following procedure shall be adhered to:

- safely remove refrigerant following local and national regulations;
- evacuate;
- purge the circuit with inert gas;
- evacuate;
- continuously flush or purge with inert gas when using a flame to open the circuit; and
- open the circuit.

The refrigerant charge shall be recovered into the correct recovery cylinders if venting is not allowed by local and national codes. For appliances containing flammable refrigerants, the system shall be purged with oxygen-free nitrogen to render the appliance safe for flammable refrigerants. This process might need to be repeated several times. Compressed air or oxygen shall not be used for purging refrigerant systems.

For appliances containing flammable refrigerants, refrigerant purging shall be achieved by breaking the vacuum in the system with oxygen-free nitrogen and continuing to fill until the working pressure is achieved, then venting to the atmosphere, and finally pulling down to a vacuum. This process shall be repeated until no refrigerant is within the system. When the final oxygen-free nitrogen charge is used, the system shall be vented down to atmospheric pressure to enable work to take place.

The outlet for the vacuum pump shall not be close to any potential ignition sources, and ventilation shall be available.

16. Charging procedures

In addition to conventional charging procedures, the following requirements shall be followed:

- Works shall be undertaken with appropriate tools only (In case of uncertainty, please consult the manufacturer of the tools for use with flammable refrigerants) Ensure that contamination of different refrigerants does not occur when using charging equipment. Hoses or lines shall be as short as possible to minimize the amount of refrigerant contained in them.

- Ensure that the refrigeration system is earthed before charging the system with refrigerant.
- Label the system when charging is complete(if not already). Extreme care shall be taken not to overfill the refrigeration system.
- Before recharging the system, it shall be pressure tested with oxygen-free nitrogen (OFN). The system shall be leak tested on completion of charging but before commissioning. A follow-up leak test shall be carried out before leaving the site.

17. Decommissioning

Before carrying out this procedure, the technician must be completely familiar with the equipment and all its details. It is recommended good practice that all refrigerants are recovered safely. Before the task is carried out, an oil and refrigerant sample shall be taken in case analysis is required before the re-use of recovered refrigerant. Electrical power must be available before the task commences.

a. Become familiar with the equipment and its operation.
b. Isolate system electrically
c. Before attempting the procedure ensure that:
   - mechanical handling equipment is available, if required, for handling refrigerant cylinders;
   - all personal protective equipment is available and being used correctly;
   - the recovery process is supervised at all times by a competent person;
   - recovery equipment and cylinders conform to the appropriate standards.
d. Pump down the refrigerant system, if possible.
e. If a vacuum is not possible, make a manifold so that refrigerant can be removed from various parts of the system.
f. Make sure that the cylinder is situated on the scales before recovery takes place.
g. Start the recovery machine and operate following instructions.
h. Do not overfill cylinders (no more than 80 % volume liquid charge)
i. Do not exceed the maximum working pressure of the cylinder, even temporarily.
j. When the cylinders have been filled correctly and the process completed, make sure that the cylinders and the equipment are removed from the site promptly and all isolation valves on the equipment are closed off.
k. Recovered refrigerant shall not be charged into another refrigeration system unless it has been cleaned and checked.

18. Labelling

Equipment shall be labeled stating that it has been de-commissioned and emptied of refrigerant. The label shall be dated and signed. For appliances containing FLAMMABLE REFRIGERANTS, ensure that there are labels on the equipment stating the equipment contains FLAMMABLE REFRIGERANT.

19. Recovery

When removing refrigerant from a system, either for servicing or decommissioning, it is recommended good practice that all refrigerants are removed safely.

When transferring refrigerant into cylinders, ensure that only appropriate refrigerant recovery cylinders are employed. Ensure that the correct number of cylinders for holding the total system charge is available. All cylinders to be used are designated for the recovered refrigerant and labeled for that refrigerant (i. e. special cylinders for the recovery of refrigerant). Cylinders shall be complete with pressure-relief valves and associated shut-off valves in good working order. Empty recovery cylinders are evacuated and, if possible, cooled before recovery occurs.

The recovery equipment shall be in good working order with a set of instructions concerning the equipment that is at hand and shall be suitable for the recovery of the flammable refrigerant. If in doubt, the manufacturer should be consulted. In addition, a set of calibrated weighing scales shall be available and in good working order. Hoses shall be complete with leak-free disconnect couplings and in good condition.

The recovered refrigerant shall be processed according to local legislation in the correct recovery cylinder, and the relevant waste transfer note arranged. Do not mix refrigerants in recovery units especially not in cylinders.

If compressors or compressor oils are to be removed, ensure that they have been evacuated to an acceptable level to make certain that flammable refrigerant does not remain within the lubricant. The compressor body shall not be heated by an open flame or other ignition sources to accelerate this process. When oil is drained from a system, it shall be carried out safely.

20. Transportation, marking, and storage for units that employ flammable refrigerants

a. **General** - The following information is provided for units that employ FLAMMABLE REFRIGERANTS.
b. **Transport of equipment containing flammable refrigerants** - Attention is drawn to the fact that additional transportation regulations may exist concerning equipment containing flammable gas. The maximum number of pieces of equipment or the configuration of the equipment permitted to be transported together will be determined by the applicable transport regulations.
   - Cylinders shall be kept upright.
c. **Marking of equipment using signs** - Signs for similar appliances used in a work area are generally addressed by local regulations and give the minimum requirements for the provision of safety and/or health signs for a work location.

   All required signs are to be maintained, and employers should ensure that employees receive suitable and sufficient instruction and training on the meaning of appropriate safety signs and the actions that need to be taken in connection with these signs.

   The effectiveness of signs should not be diminished by too many signs being placed together.

   Any pictograms used should be as simple as possible and contain only essential details.
d. **Disposal of equipment using flammable refrigerants See national regulations.**

e. **Storage of equipment/appliances -** The storage of the appliance should be following the applicable regulations or instructions, whichever is more stringent.

f. **Storage of packed (unsold) equipment -** Storage package protection should be constructed in such a way that mechanical damage to the equipment inside the package will not cause a leak of the REFRIGERANT CHARGE.
The maximum number of pieces of equipment permitted to be stored together will be determined by local regulations.

21. Unventilated areas

- An unventilated area where the appliance using FLAMMABLE REFRIGERANTS is installed shall be so constructed that should any refrigerant leak, it will not stagnate to create a fire or explosion hazard.
- If appliances are connected via an air duct system to one or more rooms with A2L REFRIGERANTS are installed in a room with an area less than Amin, that room shall be without continuously operating open flames (e.g. an operating gas appliance) or other POTENTIAL IGNITION SOURCES (e.g. an operating electric heater, hot surfaces). A flame-producing device may be installed in the same space if the device is provided with an effective flame arrest.
- Auxiliary devices that may be a POTENTIAL IGNITION SOURCE shall not be installed in the ductwork. Examples of such POTENTIAL IGNITION SOURCES are hot surfaces with a temperature exceeding 700 °C and electric switching devices.
- Only auxiliary devices (such as certificated heater kit) approved by the appliance manufacturer or declared suitable with the refrigerant shall be installed in connecting ductwork.
- For duct-connected appliances, false ceilings or drop ceilings may be used as a return air plenum if a REFRIGERANT DETECTION SYSTEM is provided in the appliance and any external connections are also provided with a sensor immediately below the return air plenum duct joint.
- REFRIGERANT SENSORS for REFRIGERANT DETECTION SYSTEMS Shall Only be replaced with sensors specified by the appliance manufacturer.
- LEAK DETECTION SYSTEM installed. The unit must be powered except for service.

Table S-5: Explanation of symbols displayed on the indoor unit or outdoor unit

	WARNING	This symbol shows that this appliance used a flammable refrigerant. If the refrigerant is leaked and exposed to an external ignition source, there is a risk of fire.
	CAUTION	This symbol shows that the operation manual should be read carefully.
	CAUTION	This symbol shows that service personnel should be handling this equipment referencing the installation manual.
	CAUTION	This symbol shows that information is available such as the operating manual or installation manual.

A2L

Caution: Risk of fire/flammable materials

Installation Accessories

The system is shipped with the following accessories. Use all the installation parts and accessories to install the system. Improper installation may result in water leakage, electrical shock, and fire, or cause the equipment to fail. Keep the installation manual in a safe place and do not discard any other accessories until the installation work has been completed.

Table A-1: Included Accessories

QTY.	Part Name	Part Image
2	Manual	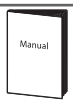
4	Cable ties (type A)	
2	Insulation sleeve	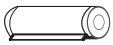
2	Flare nut	
2	Braze to flare adapter	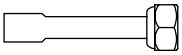

Table A-2: Optional Accessories

QTY.	Part Name	Part Image
1	Remote controller	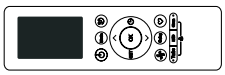
1	Remote controller holder	
2	Battery	
1	Wired remote control	

NOTE

The wired system control functions as an IR receiver for the handheld remote, if the remote is not used it must be retained with the indoor unit to adjust parameters, and for troubleshooting.

Product Overview

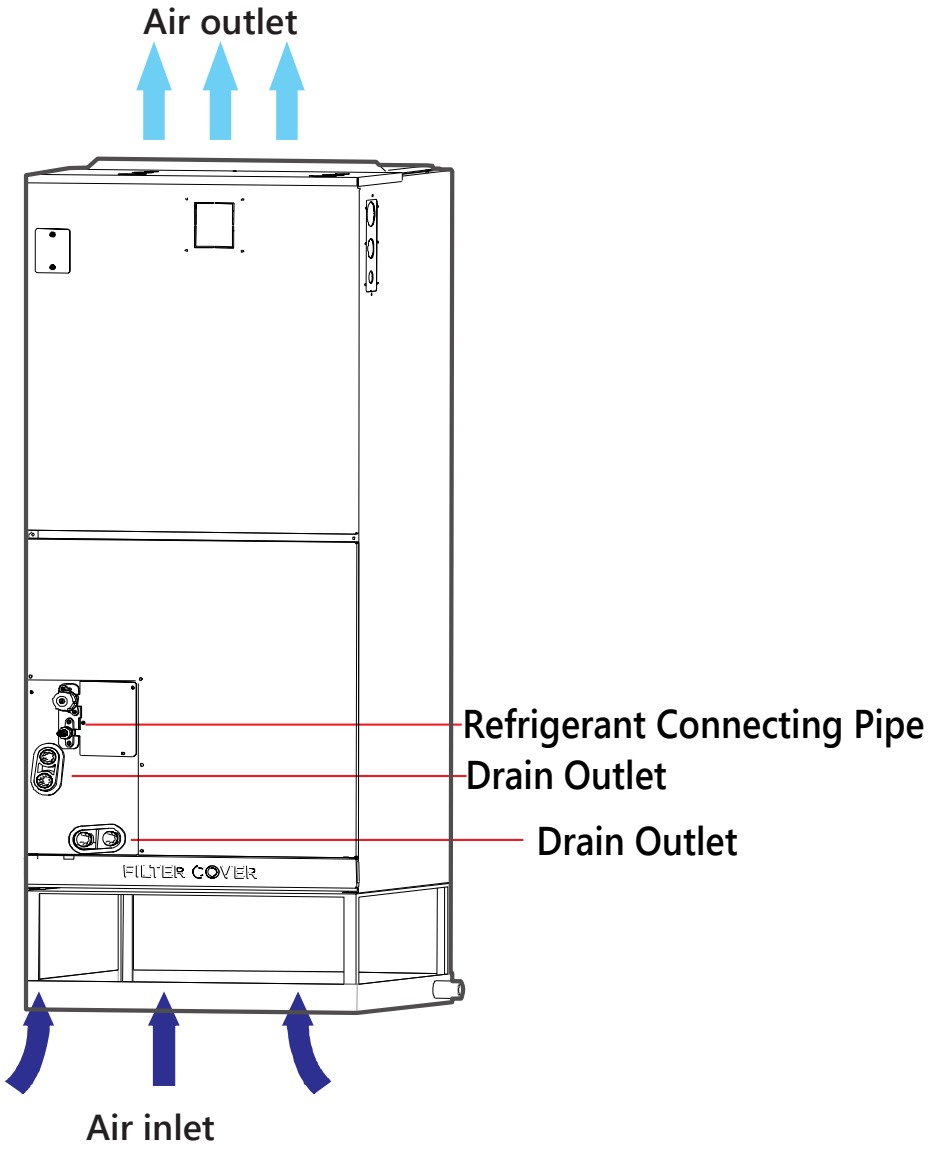

Fig. P-1: External Component Location

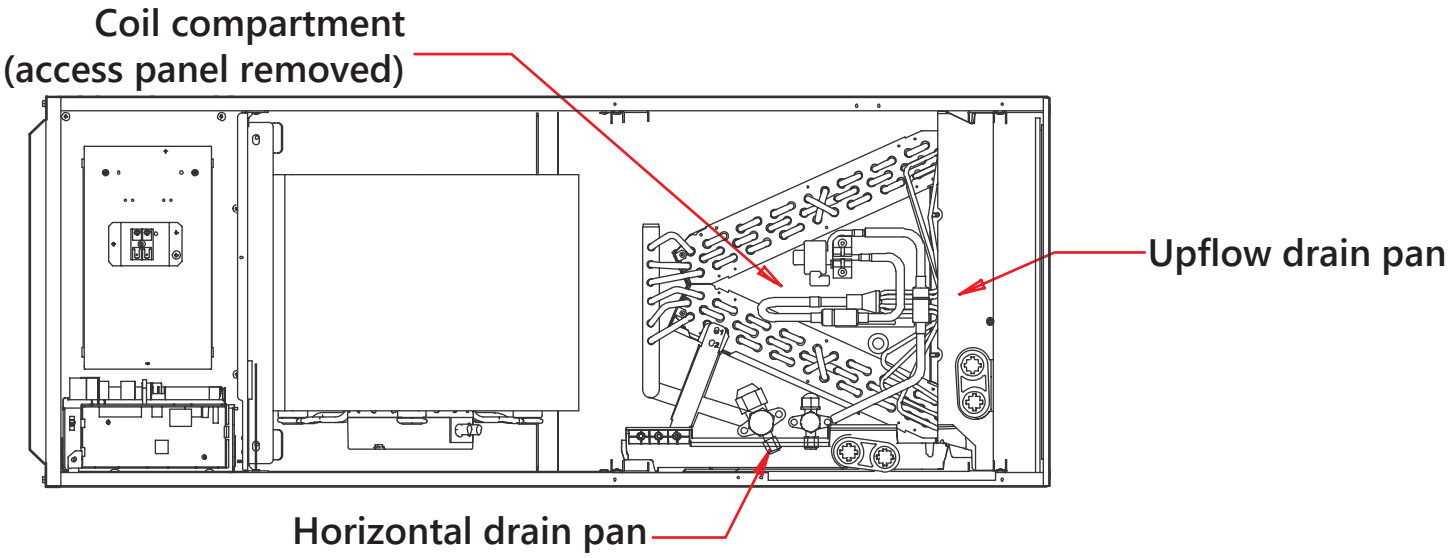

Fig. P-2: Internal Component Location

Dimensions

Table D-1: Dimensions

System Size	Unit Sizes			Duct Opening Area		
	(A) in. (mm)	(B) in. (mm)	(C) in. (mm)	(D) in. (mm)	(E) in. (mm)	(F) in. (mm)
18K	45 (1,143)	21 (533)	17-1/2 (445)	15-3/4 (400)	10-1/4 (260)	23 (585)
24K						
30K	49 (1,245)		21 (534)	19-1/4 (490)		
36K						
48K	53 (1,346)		24-1/2 (622)	22-7/8 (580)		
60K						

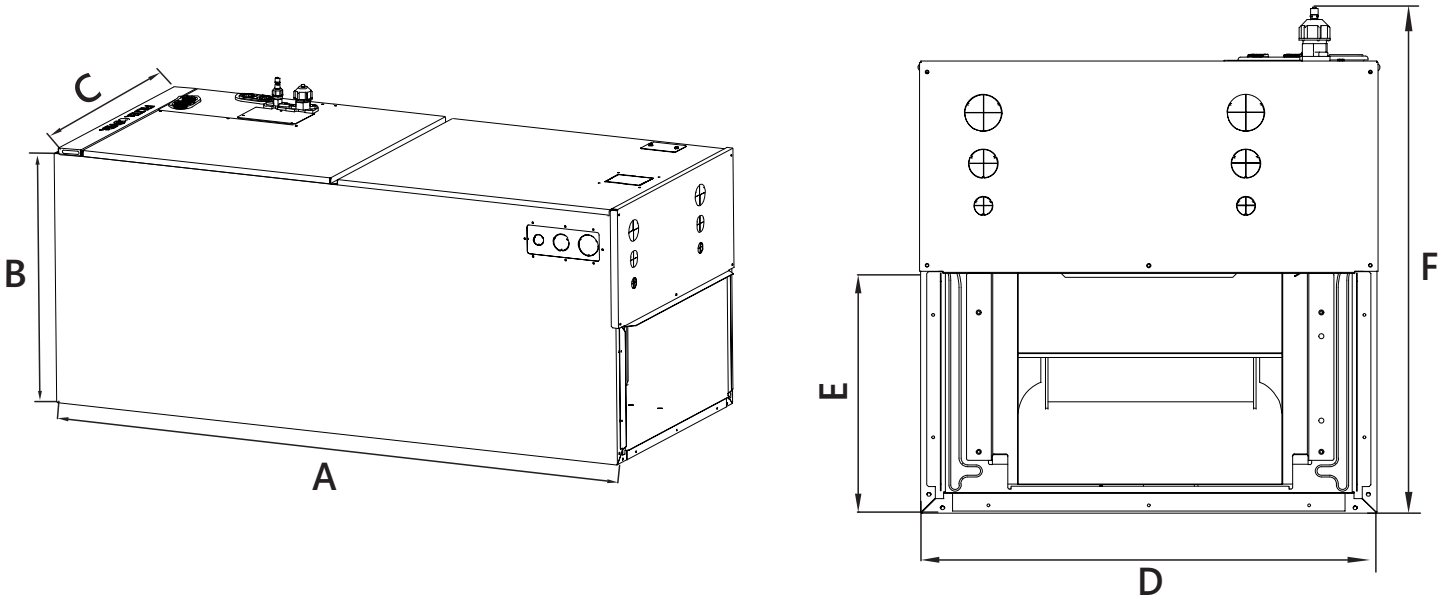

Fig. D-1: Unit Dimensions

Recommended size of filter

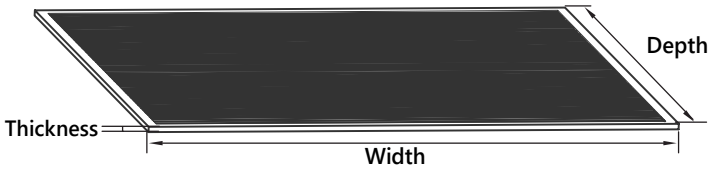

Fig. D-2: Filter Dimensions

Table D-2: Recommended Filter Sizes

Model (Btu/h)	Width in. (mm)	Depth in. (mm)	Thickness in. (mm)
18-24K	16 (406.4)	20 (508)	1 (25.4)
30-48K	19-1/2 (495.3)		
60K	23 (584.2)		

Clearances

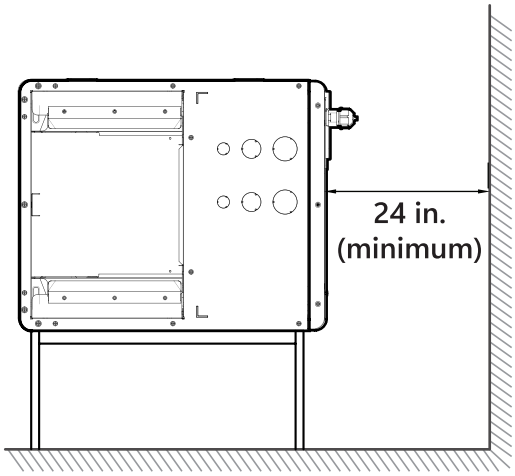

Horizontal installations

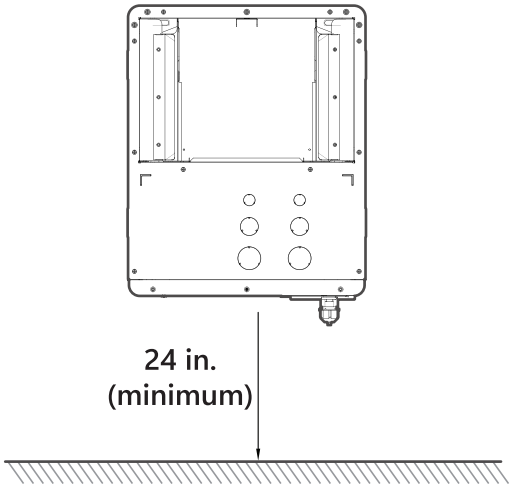

Vertical installations

Fig. C-1: Clearance Dimensions

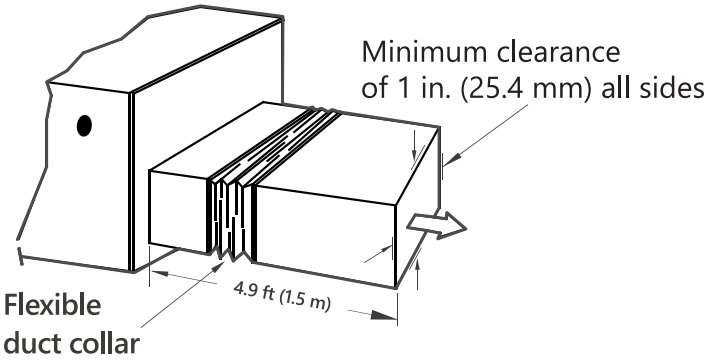

The outlet side duct length 4.9 ft. (1.5 m)

Fig. C-2: Duct Clearances

NOTE

- For horizontal installation a secondary drain pan that is not supplied must be installed.
- For horizontal installation IDU installation requires a 5° tilt (drainpipe side in low position).
- Vertical up and horizontal left installation does not need to change the direction of the evaporator.

⚠ WARNING

- **If heating elements are added, the distance from the ground must be greater than 18 in. (46 cm)**. Failure to follow these instructions can result in death, explosion or fire.

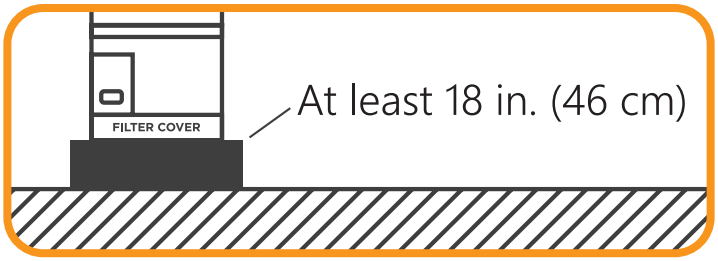

- Securely install the indoor unit on a structure that can support its weight. If the structure is too weak, the unit may fall and cause personal injury, unit and property damage, or death.
- The structure that the equipment is suspended from must support the weight of the indoor unit.
- Leave enough room for installation and maintenance.
- Leave enough room for the connecting pipe and drainpipe.

The units can be installed in a vertical (down and up) and Horizontal (right and left) configuration.

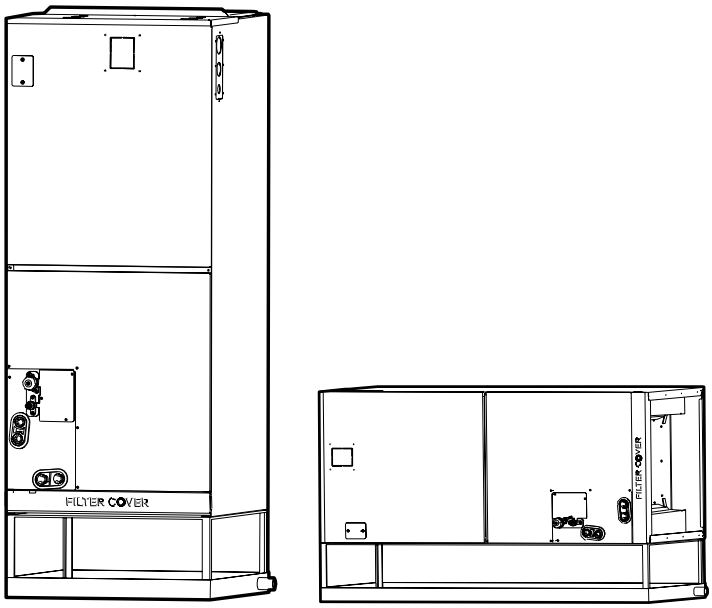

Vertical up Horizontal

Fig. C-3: Installation Direction Options

IMPORTANT

When the unit is installed over a finished ceiling and/or living area, building codes may require a field-supplied secondary condensate pan to be installed under the entire unit.

Installation Requirements

⚠ CAUTION

Install the indoor and outdoor units, cables and wires at least 3-1/5 ft. (1 m) from televisions or radios to prevent static or image distortion. Depending on the appliances, a 3-1/5 ft. (1 m) distance may not be sufficient.

The Indoor unit must be electrically grounded per national and local electrical code.

⚠ WARNING

DO NOT INSTALL IN THE FOLLOWING LOCATIONS:

- DO NOT install the indoor unit in a moist environment. Excessive moisture can corrode the equipment, and electrical components, and cause electrical shorts.

- Areas with strong electromagnetic waves.

- Coastal areas with high salt content in the air.

- Areas with oil drilling or fracking.

- Areas that store flammable materials or gas.

- Areas where there may be detergent or other corrosive gases in the air, such as bathrooms, or laundry rooms.

- Areas where the air inlet and outlet may be obstructed.

- The danger of explosion. Keep flammable materials and vapors, such as gasoline, away from the air handler.

⚠ WARNING

There must be an airtight seal between the bottom of the air handler and the return air plenum. To ensure a tight seal, use fiberglass sealing strips, foil duct tape, caulking, or an equivalent sealing method between the plenum and the air handler cabinet. Return air must not be drawn from a room where this air handler or any gas-fueled appliance (e.g., water heater) or carbon monoxide-producing device (e.g., wood fireplace) is installed.

NOTE

Remove all accessories and packing in the air outlet before installation.

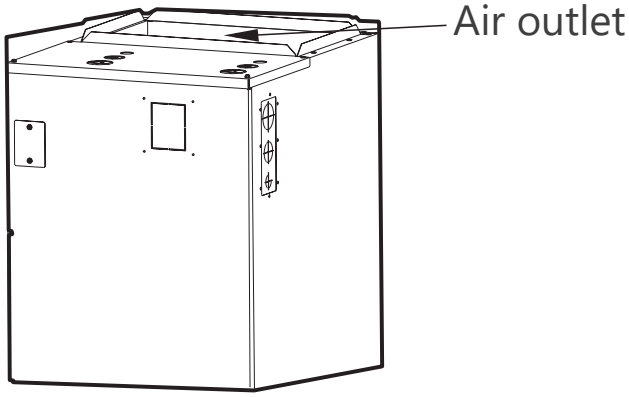

Fig. IR-1: Air Outlet Location

⚠ WARNING

- Please apply a sealant around the places where the wires, refrigerant pipes and condensate pipes enter the cabinet.
- Use duct tape or flexible sealant to seal closed any space around the holes where the drain lines exit the cabinet. Warm air must not be allowed to enter through any gaps or holes in the cabinet.

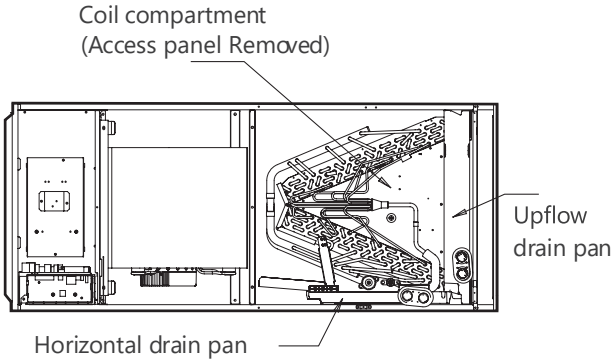

Fig. IR-2: Air Handler Layout

DUCTWORK ACOUSTICAL TREATMENT

Metal duct systems that do not have a 90-degree elbow and 10 ft. (3 m) of main duct to first branch take-off may require internal acoustic insulation lining. As an alternative, fibrous ductwork may be used if constructed and installed following the latest edition of the SMACNA construction standard on fibrous glass ducts. Both acoustic lining and fibrous ductwork shall comply with the National Fire Protection Association as tested by UL Standard 181 for Class 1 air ducts. The air supply and return may be handled in one of several ways, whichever situation is best suited for the installation (See Fig. IR-4). Many issues encountered with split-system installations can be linked to improperly designed or installed duct systems. It is therefore very

important that the duct system be properly designed and installed.

The use of flexible duct collars is recommended to minimize the transmission of vibration/noise into the conditioned space. Where the return air duct is short, or where sound is liable to be a problem, sound-absorbing glass fiber should be used inside the duct. Insulation of ductwork must be installed according to local codes and best practices. The supply air duct should be properly sized by using a transition to match the unit opening. This unit is not designed for non-ducted (free blow) applications.

NOTE

Ductwork should be fabricated and installed following local and/or national codes.

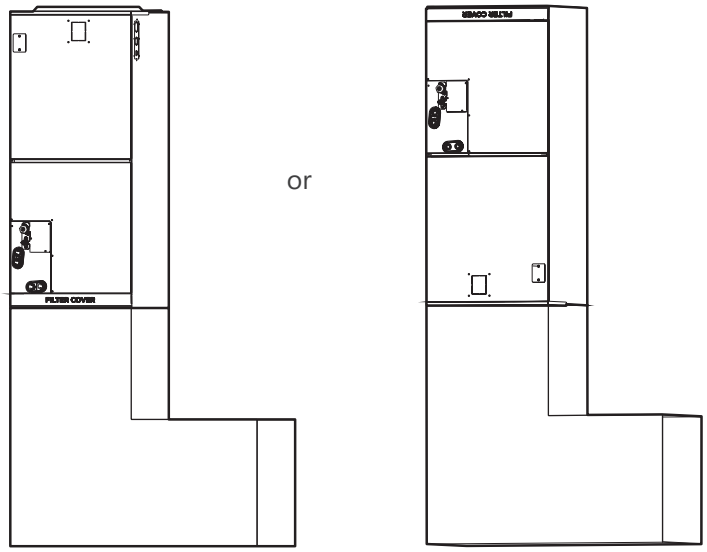

Fig. IR-3: Air Handler Vertical Installation

Mounting instructions: When installed vertically (upward or downward), the lower end of the air outlet needs to be connected to the L-shaped metal air duct and fastened by screws.

If the return air is to be ducted, install a duct flush with the floor. Set the unit on the floor over the opening. All return air must pass through the coil.

DUCT CONNECTION REQUIREMENTS

- Air supply and return may be handled in one of several ways best suited to the installation (See Table D1 for dimensions for duct inlet and outlet connections). Many problems encountered with combination cooling systems can be linked to improperly designed or installed duct systems.
  It is therefore highly important for the success of the installation that the duct system be properly designed and installed. Use flexible duct collars to minimize the transmission of vibration/noise into the conditioned space. Where the return air duct is short, or where sound could potentially be a problem, a sound-absorbing liner should be used inside the duct.

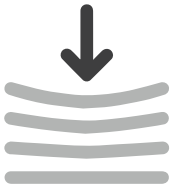

- The duct must be insulated where it runs through an unconditioned space during the cooling season. The use of a vapor barrier is recommended to prevent the absorption of moisture from the surrounding air into the insulation.

- The supply air duct connection should be properly sized by using a transition to match the unit opening.
- All ducts should be suspended using flexible hangers and never fastened directly to the structure. This unit is not designed for non-ducted (free blow) applications.
- Ductwork should be fabricated and installed following local and/or national codes.

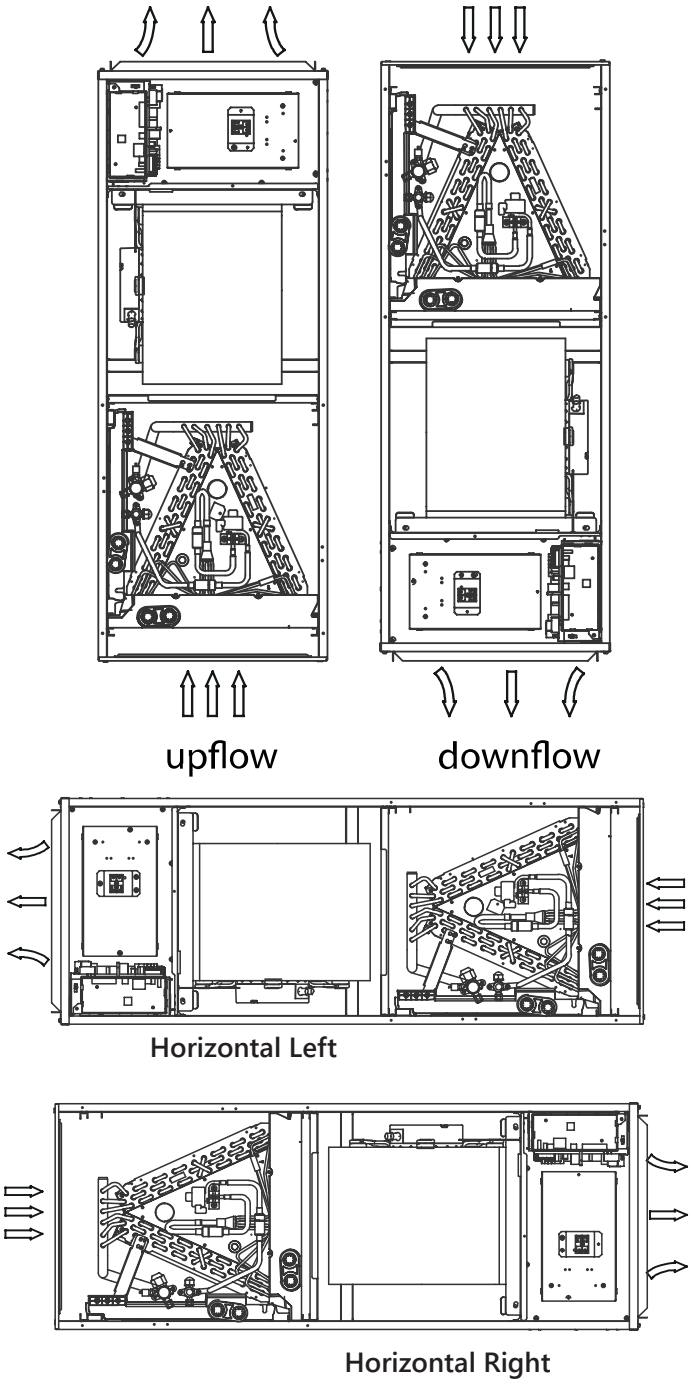

Fig. IR-4: Multi-Position Installation Options

NOTE

Vertical up and horizontal left installation does not need to change the direction of evaporator.

Installation

Step 1 - Mounting the Unit

The units come from the factory set up for **Upflow** and **Horizontal Right** configurations.
Connecting the drainage pipes and wiring for **Downflow** and **Horizontal Left** applications.

1. Open the upper front panel.

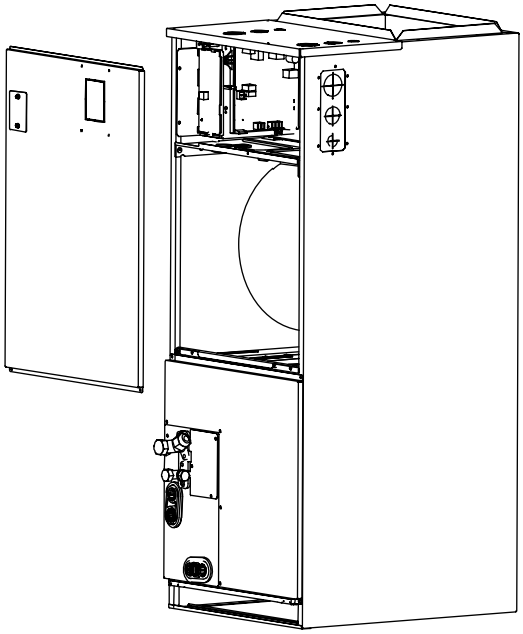

Fig. 1-1: Remove Upper Front Panel

2. Open the cover of the electronic control box.
3. Connect the pipes and install the drainage pipes.
4. Connect the wire according to the wiring diagram located inside on the upper front panel.

Downflow and horizontal left instructions

1. Remove the filter door, then take the filter off.

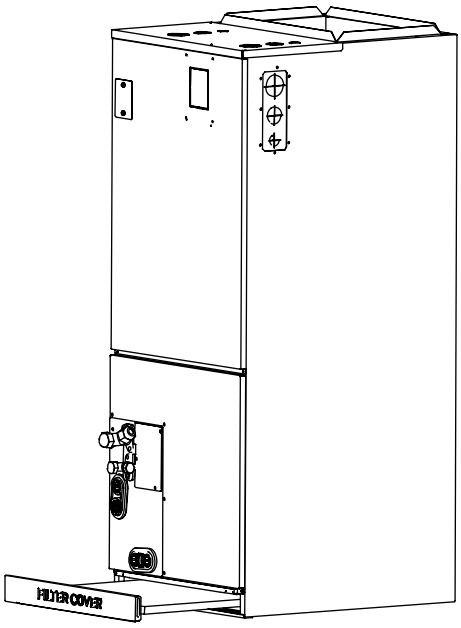

Fig. 1-2: Remove the Filter

2. Open the upper front panel. See Fig. 1-1.
3. Remove the evaporator cover plate.

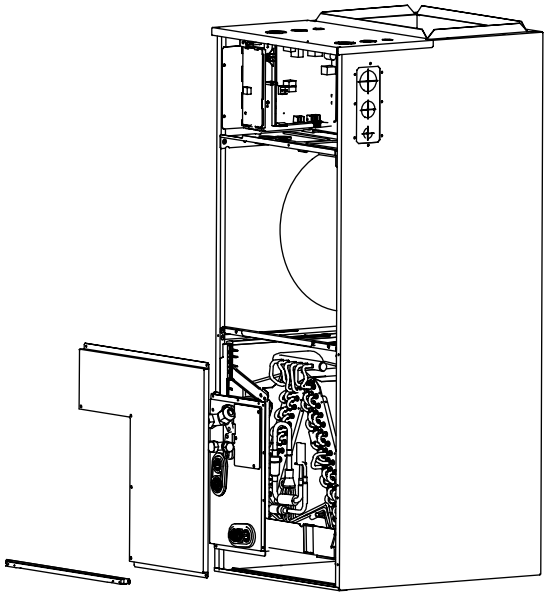

Fig. 1-3: Remove Evaporator Cover Plate

4. Unplug temperature sensors, and electronic expansion valve (EEV), and the refrigerant detector.

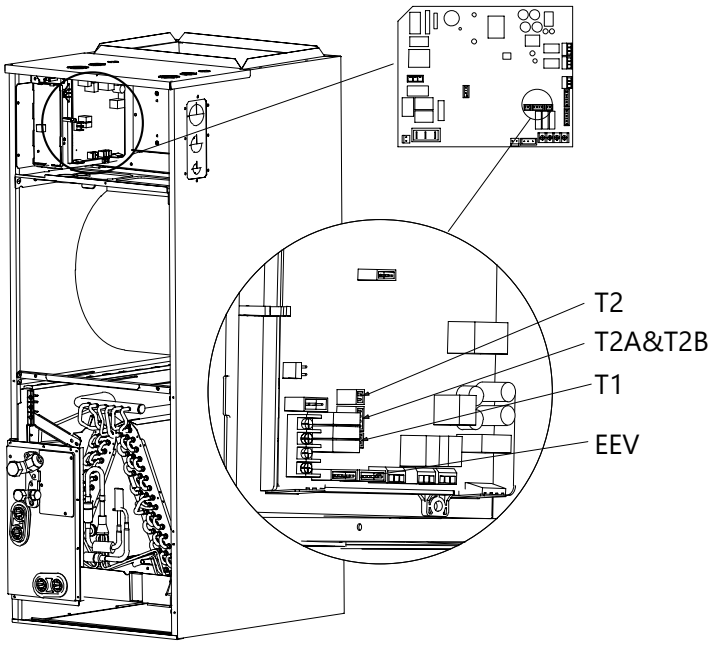

Fig. 1-4: Unplug the Sensors from the Board

5. Remove the sensor and detector wires from the coil section.
   T1: IDU room sensor (T1)
   T2: IDU coil sensor (T2)
   T2A: Evaporator coil temperature sensor (T2A)
   T2B: Evaporator coil inlet temperature sensor (T2B)

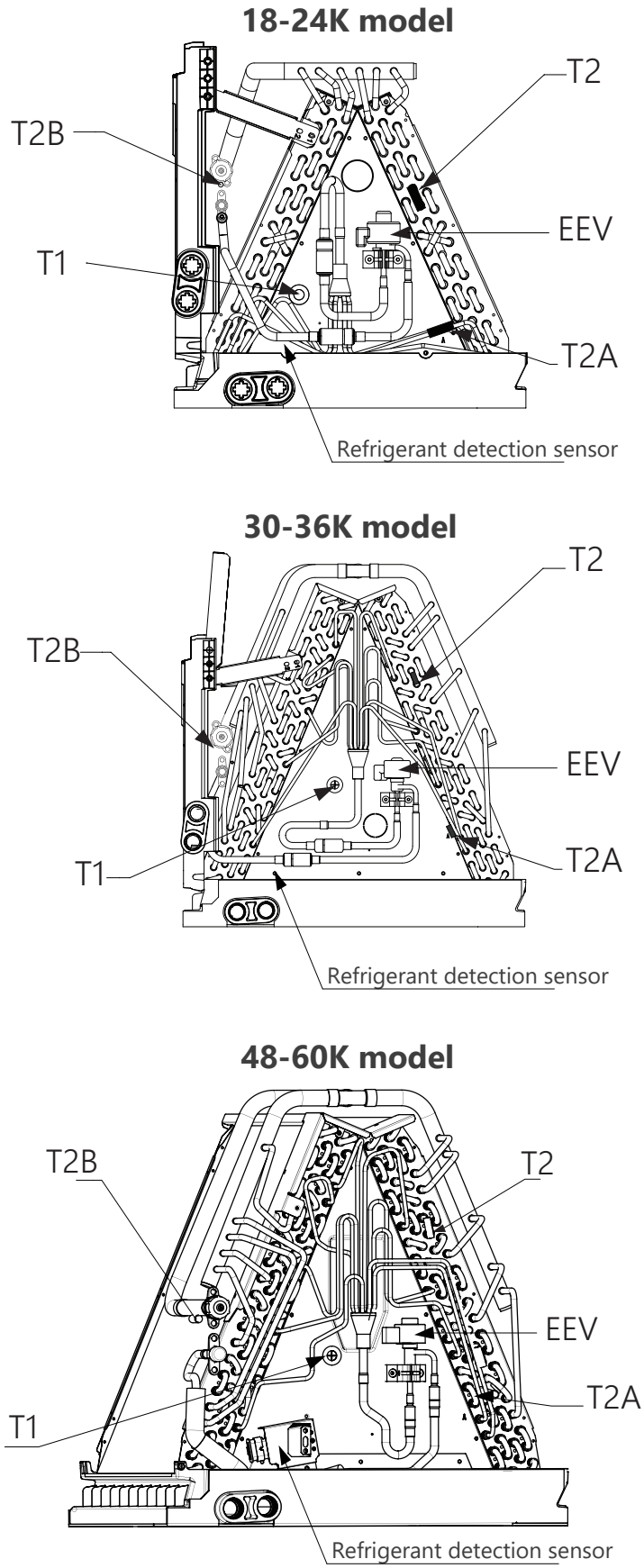

Fig. 1-5: T1 Sensor Location by Model

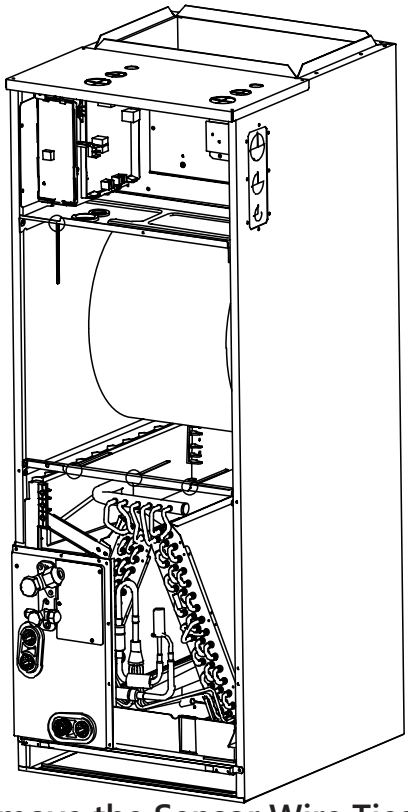

Fig. 1-6: Remove the Sensor Wire Ties

6. Take out the evaporator and drain pan and rotate 180°.

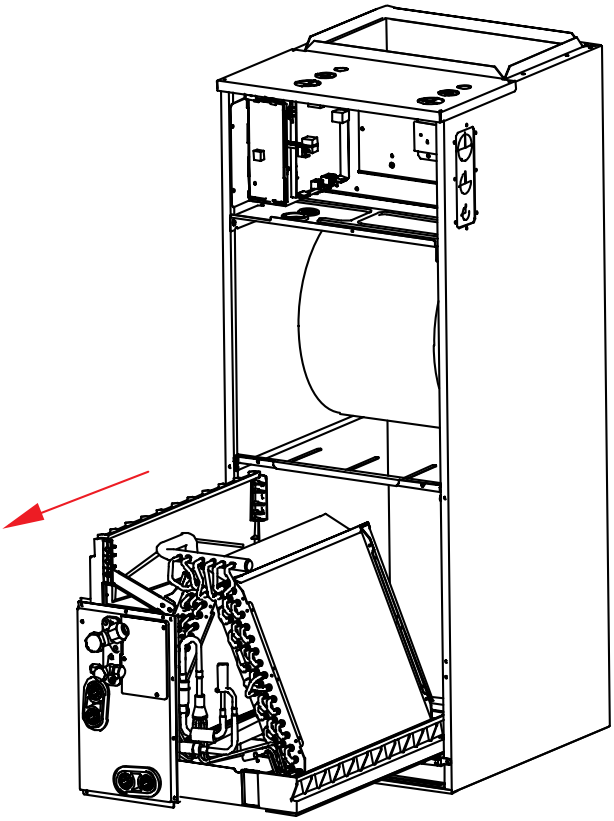

Fig. 1-7: Remove and Rotate Drain Pan

7. Adjust the position of the mounting parts.

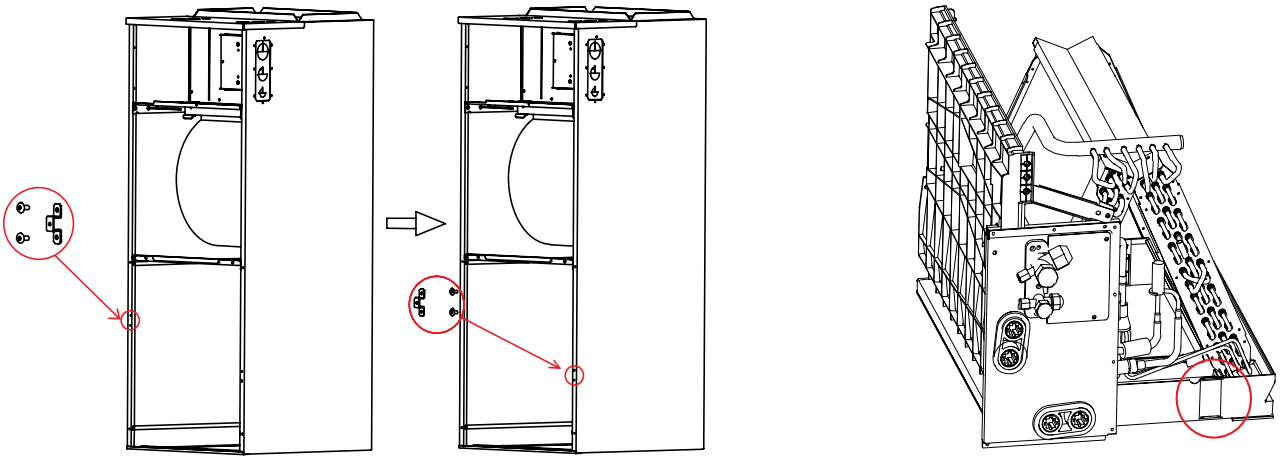

Fig. 1-8: Adjust Mounting Parts Position

8. Reinstall the evaporator and drain pan.

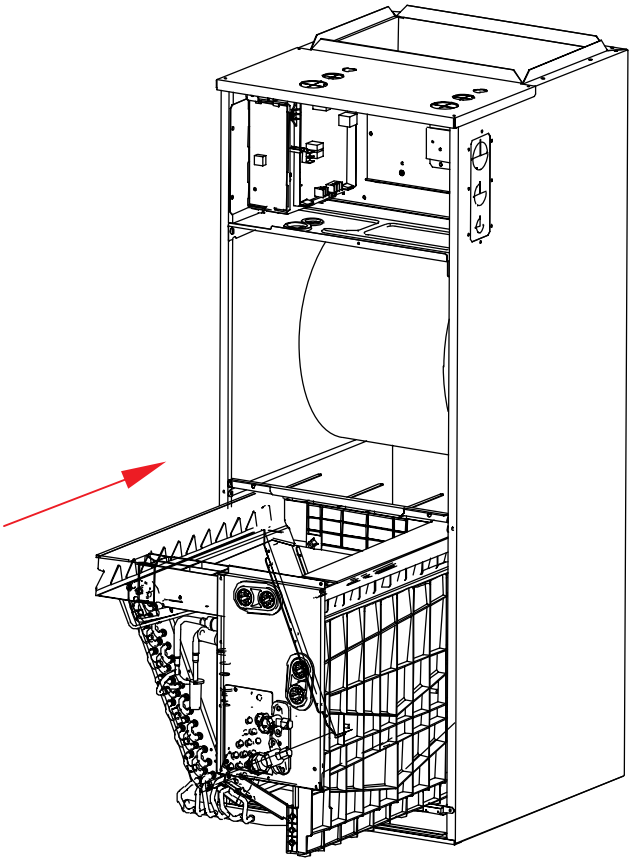

Fig. 1-9: Reinstall Evaporator and Drain Pan

9. Reinstall T1, T2, T2A, T2B sensor plugs and electronic expansion valve (EEV) and tie up the sensor wires.

NOTE

The wire body needs to pass through the drain pan's wire groove and be stuck on the drain pan's hook.

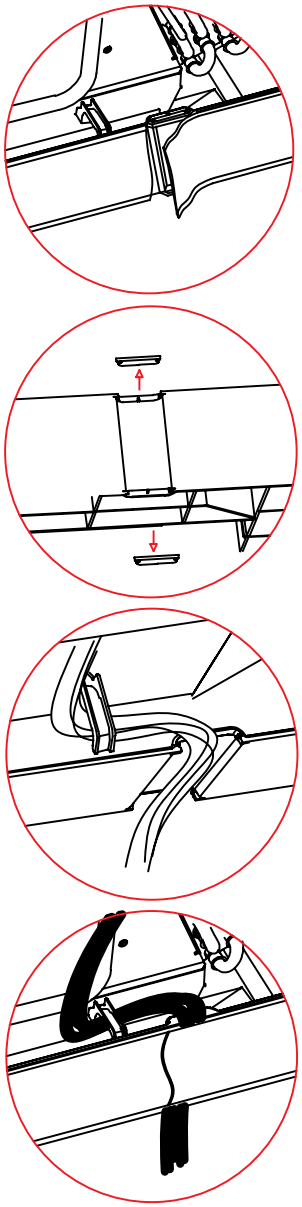

Cut the foam gasket.

Remove knockouts

Hook the wire into the buckle and go down from the wire slot.

Replace foam gasket.

Fig. 1-10: Reinstall Sensor Plugs and EEV

10.The evaporator is assembled in place.

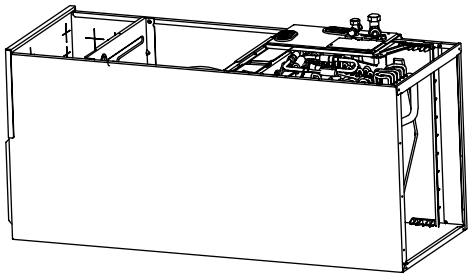

Fig. 1-11: Assembled Evaporator

11. Use cable ties to attach the room temperature sensor as shown in the figure.

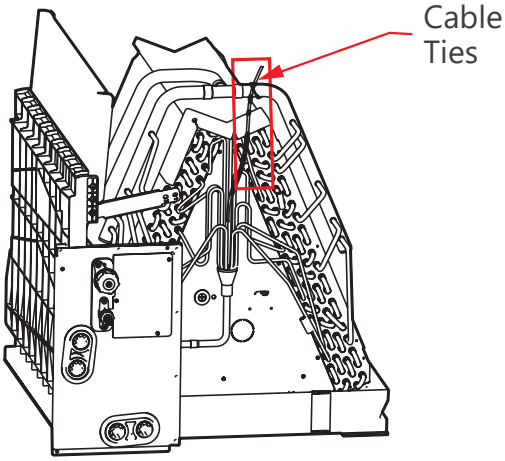

Fig. 1-12: Attach the Sensor

12. Reinstall the evaporator cover plate.

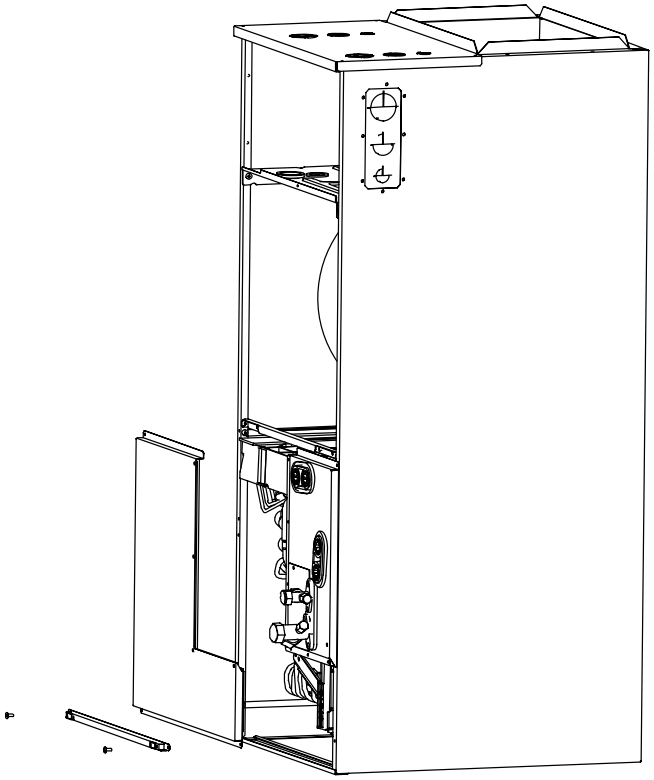

Fig. 1-13: Reinstall the Cover Plate

13. Connect the wire according to the wiring diagram.

14.Reassemble the upper front panels.

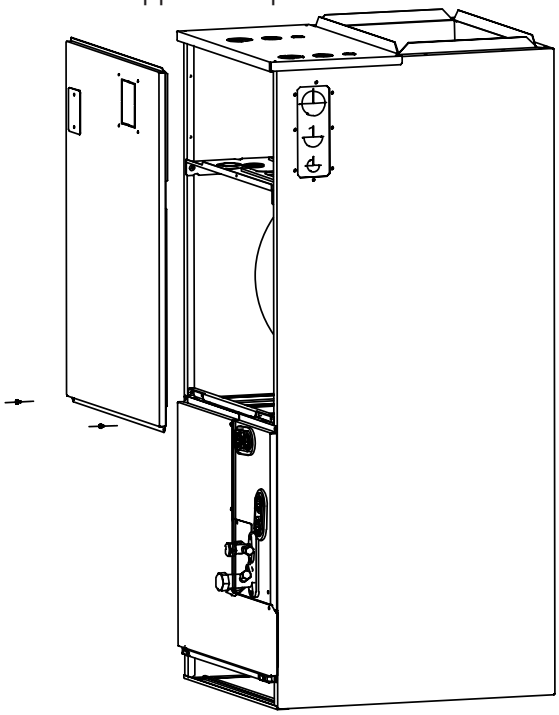

Fig. 1-14: Reassemble Upper Cover

15. Reassenble the upper cover and reinstall the filter and the filter cover plate.

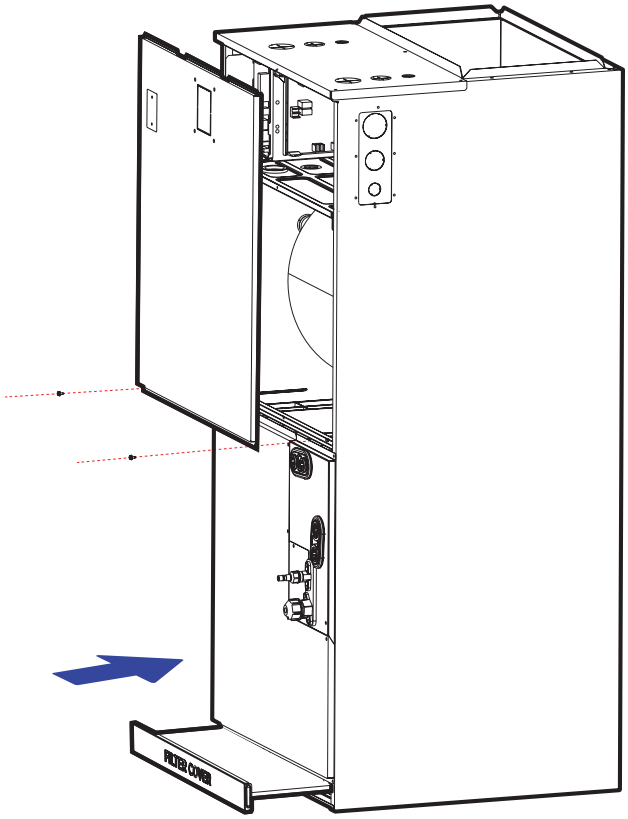

Fig. 1-15: Reinstall Filter and Cover Plate

Step 2 - Drain Piping

⚠ CAUTION

FOR ALL PIPE INSTALLATION

- Insulate all piping to prevent condensation, which could lead to water damage.
- The drainpipe drains water away from the unit. If it is bent or installed incorrectly, water may leak, causing a water-level switch to malfunction.
- In HEAT mode, the outdoor unit will discharge water. Ensure that the drain hose is placed in an appropriate area to avoid water damage and icy conditions on walkways.
- DO NOT pull the drainpipe forcefully. This could disconnect it.

NOTE

If installed above a finished living space, a secondary drain pan (as required by many building codes), must be installed under the entire unit and its condensate drain line must be routed to a location such that the user will see the condensate discharge.

NOTE

Installation requires PVC pipe or other suitable material per local and national codes, which can be obtained at your local hardware store or dealer.

- After removal of drain pan plug(s), check drain hole(s) to verify that the drain opening is fully open and free of any debris. Also, check to make sure that no debris has fallen into the drain pan during installation that may plug up the drain opening. Seal around the exiting drainpipe, liquid, and suction lines to prevent infiltration of humid air.
- On units of this type, where the blower "draws" rather than "blows" air through the coil, traps must be installed in the condensate drain lines (primary and auxiliary, if used). Traps prevent the blower from drawing air through the drain lines into the air supply.

VERTICAL INSTALLATIONS

These units operate with negative pressure at the drain connections and a drain trap is required. The trap needs to be installed as close to the unit as possible. Make sure the top of the trap is below the connection to the drain pan to allow complete drainage of the pan.

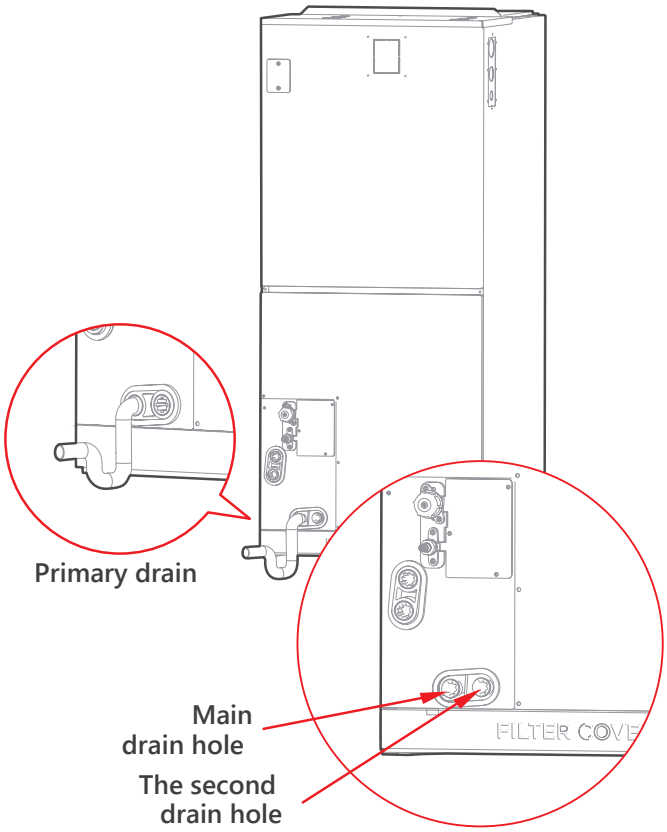

Fig. 2-1: Vertical discharge

NOTE

A secondary drain or external drain pan can be mandatory, please refer to the local code.

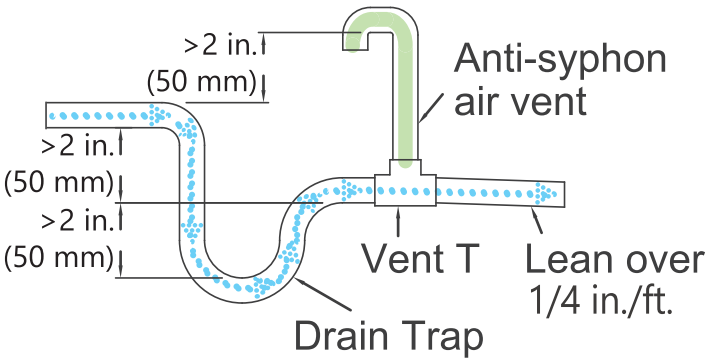

Fig. 2-2: Air Vent Arrangement

NOTE

Horizontal runs must also have an anti-siphon air vent (standpipe) installed ahead of the horizontal run to eliminate air trapping.

NOTE

DRAINPIPE INSTALLATION

- Fig. 2-1 shows how to trap or plug all drains during vertical discharge.
- Fig. 2-2 shows how to trap or plug all drains during right-hand discharge.
- The seal plug are field supplied as an accessory and should be screwed tightly only by hand.
- Incorrect installation could cause water to flow back into the unit and flood.

⚠ CAUTION

The drainpipe outlet should be at least 2 in. (5 cm) above the ground. If it touches the ground, the unit may become blocked and malfunction.

Step 3 - Refrigerant Piping Connections

⚠ WARNING

All field piping must be completed by a licensed technician and must comply with local and national regulations.

- When the air conditioner is installed in a small room, measures must be taken to prevent the refrigerant concentration in the room from exceeding the safety limit in the event of refrigerant leakage. If the refrigerant leaks and its concentration exceeds its proper limit, hazards due to lack of oxygen may result.
- When installing the refrigeration system, ensure that air, dust, moisture, or foreign substances do not enter the refrigerant circuit. Contamination in the system may cause poor operating capacity, high pressure in the refrigeration cycle, explosion, or injury.
- Ventilate the area immediately if there is refrigerant leakage during the installation. Leaked refrigerant gas is both toxic and may be flammable. Ensure there is no refrigerant leakage after completing the installation work.

NOTE

Pipes are not included in the accessories, and you need to purchase them separately from the local dealer.

⚠ CAUTION

Insulate both the gas and liquid piping to prevent condensation.

IMPORTANT

Use refrigeration grade tubing **ONLY**. No other type of tubing may be used. The use of other types of tubing will void the manufacturer's warranty.

- The minimum refrigerant line length between the indoor and outdoor unit is 10 ft. (3 m).
- Do not open the service valves or remove the protective caps from the tubing ends until all connections are made.
- Bend the tubing with bending tools to avoid kinks and flat spots.
- Keep the tubing free of dirt, sand, moisture, and other contaminants to avoid damaging the refrigerant system.
- Once the pipes are flared at both ends or before brazing them, purge them with nitrogen to remove dirt and moisture before connecting them to an indoor or outdoor unit.
- Insulate both suction and liquid lines separately with insulation size as per TABLE 5-1.

DO NOT install the connecting pipe until both the indoor and outdoor units have been installed.

Table 3-1: Piping Sizes

System Size		18K	24K	30K	36K	48K	60K
Maximum Piping Length	ft. (m)	98.4 (30)	164 (50)	164 (50)	246 (75)	246 (75)	246 (75)
Minimum Piping Length	ft. (m)	10 (3)					
Max. outdoor-indoor height difference (OU higher than IU)	ft. (m)	65.6 (20)	82 (25)	82 (25)	98.4 (30)	98.4 (30)	98.4 (30)
Max. outdoor-indoor height difference (IU higher than OU)	ft. (m)	65.6 (20)	82 (25)	82 (25)	98.4 (30)	98.4 (30)	98.4 (30)
Gas Pipe (size - connection type)	in. (mm)	ø3/4 (19)					
Liquid Pipe (size-connection)	in. (mm)	ø3/8 (9.52)					
Unit Connection (in. flare)	Liquid	3/8					
	Gas	3/4					
Adapter Required at Outdoor Unit (in. flare to flare or braze)	Liquid	3/8 flare→3/8 braze					
	Gas	3/4 flare→3/4 braze					

NOTE

Ensure that the length of the refrigerant pipe, the number of bends, and the drop height between the indoor and outdoor units meet the requirements shown in Table 3-1.

Cut pipes

When preparing refrigerant pipes, take extra care to cut and flare them properly. This will ensure efficient operation and minimize the need for future maintenance.

1. Measure the distance between the indoor and outdoor units.
2. Using a pipe cutter, cut the pipe a little longer than the measured distance.
3. Make sure the pipe is cut at a perfect 90° angle.

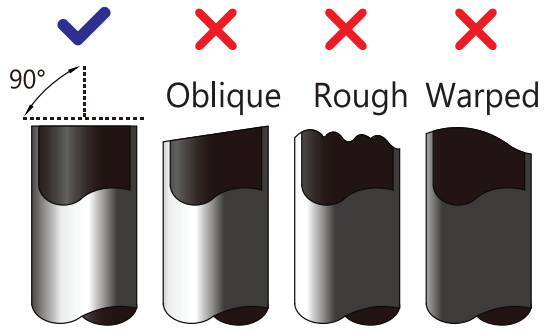

Fig. 3-1: Correct Pipe Cutting

NOTE

DO NOT DEFORM PIPE WHILE CUTTING

Be extra careful not to damage, dent, or deform the pipe while cutting. This will drastically reduce the heating efficiency of the unit.

4. Remove the Burrs

Burrs can affect the air-tight seal of the refrigerant piping connection. Therefore, they must be completely removed. To remove:

a. Hold the pipe at a downward angle to prevent burrs from falling into the pipe.
b. Using a reamer or deburring tool, remove all burrs from the cut section of the pipe

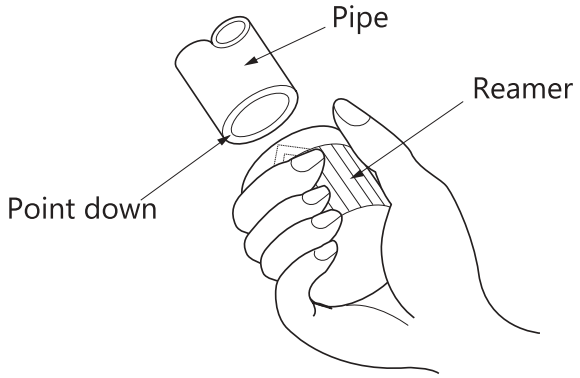

Fig. 3-2: Reamer Tool

5. Flare the Pipe Ends.

Proper flaring is essential to achieving an airtight seal.

a. After removing the burrs from the cut pipe, seal the ends with PVC tape to prevent foreign materials from entering the pipe.
b. Sheath the pipe with insulating material.
c. Place the factory flare nut on the pipe facing the proper direction. Make sure they are facing the right direction. Once the ends are flared, it is impossible to put them on or change their direction.

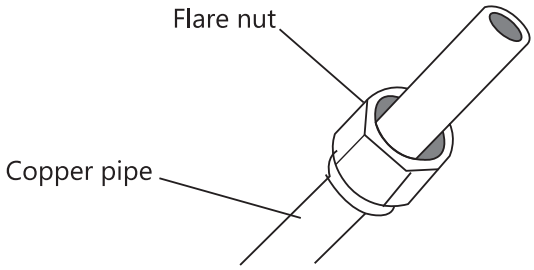

Fig. 3-3: Copper pipe and flare nut

d. Remove the PVC tape from the ends of the pipe when ready to perform the flaring work.
e. Clamp the flare block on the end of the pipe. The end of the pipe must extend beyond the flare form.

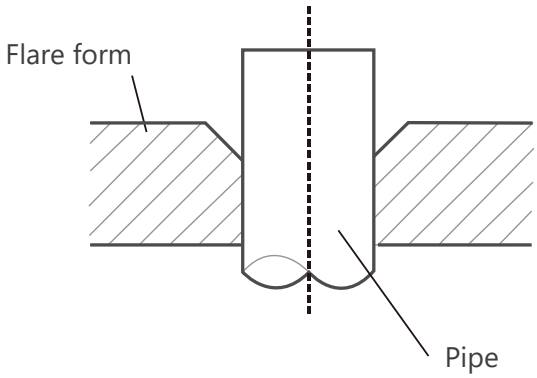

Fig. 3-4: Flare Form

f. Place the flaring tool onto the form.
g. Turn the handle of the flaring tool clockwise until the pipe is fully flared. Flare the pipe following the dimensions in Table 3-2.

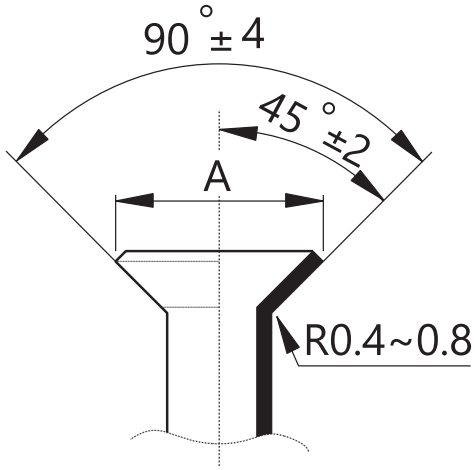

Fig. 3-5: Flare Shape

Table 3-2: Flare Dimensions/Tightening Torque

Pipe Size Outside Diameter	Flare Dimensions (A)
in. (mm)	**in. (mm)**
Ø1/4 (6.35)	11/23 - 23/64 (~9.1)
Ø3/8 (9.52)	1/2 - 33/64 (~13.2)
Ø1/2 (12.7)	41/64 -31/32 (~16.6)
Ø5/8 (15.88)	49/64 - 35/32 (~19.7)
Ø3/4 (19.05)	-

Tightening Torque for Flare Nuts

Pipe Size Outside Diameter	Tightening Torque
in. (mm)	**ft. - lbs.**
Ø1/4 (6.35)	13.0 - 18.0
Ø3/8 (9.52)	24.6 - 30.4
Ø1/2 (12.7)	39.8 - 47.7
Ø5/8 (15.88)	45.4 - 59.3
Ø3/4 (19.05)	7.15 - 87.5

h. Remove the flaring tool and flare block, then inspect the end of the pipe for cracks and even flaring.

6. Connect the Pipes

Connect the copper pipes to the indoor unit first, then connect the pipes to the outdoor unit. Connect the low-pressure pipe first, then connect the high-pressure pipe.

a. Align the center of the two pipes that you will connect.

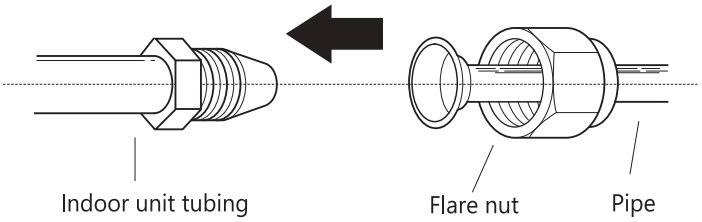

Fig. 3-6: Align the center of the two pipes

b. Tighten the flare nut as much as possible by hand.
c. Using a wrench, grip the nut on the unit tubing.
d. While firmly gripping the nut, use a torque wrench to tighten the flare nut according to the torque values listed in Table 3-2.

NOTE

Use both a spanner and a torque wrench when connecting or disconnecting pipes to/from the unit.

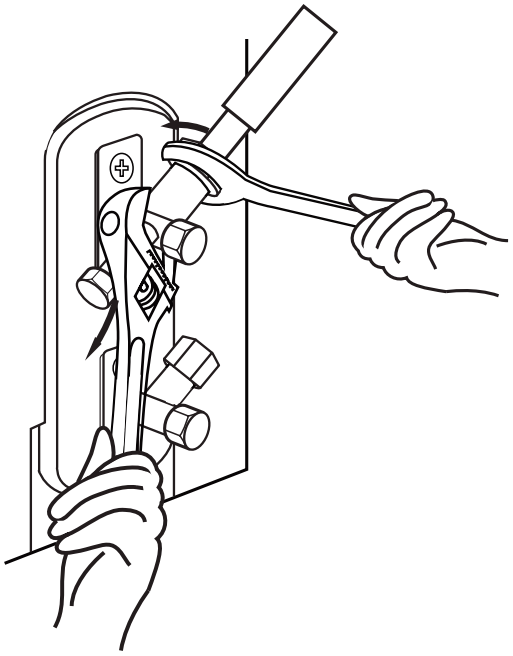

Fig. 3-7: Spanner and Backup Wrench

All tubing bends should be performed with a properly sized tubing bender to prevent kinking or damaging the tubing.

e. While firmly gripping the nut, use a torque wrench to tighten the flare nut according to the torque values listed in Table 3-2.

⚠ CAUTION

Ensure to wrap insulation around the piping. Direct contact with the bare piping may result in burns or frostbite.

- Make sure the pipe is properly connected.
- Over-tightening may damage the bell mouth and under-tightening may lead to leakage.

NOTE

MINIMUM BEND RADIUS

Carefully bend the tubing in the middle according to the diagram below. DO NOT bend the tubing over 90° or more than 3 times. Use care when bending pipe, do not kink pipe.

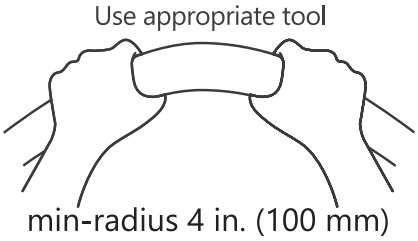

Fig. 3-8: Bend the Tubing

f. Thread this line set through the wall and connect it to the outdoor unit.
g. Insulate the suction line, including the outdoor unit valves.

Check to make sure there is no refrigerant leak after completing the installation work.

If there is a refrigerant leak, ventilate the area immediately and evacuate the system (refer to the Air Evacuation section of the outdoor unit manual).

NOTE

Do not install a suction-line filter drier in the liquid line.

8. Brazing Adapter (Optional)
   When flare to braze adapter is used, follow these steps:
   a. Refer to the liquid line and gas line connection O.D. sizes in Table 4-1 based on the model being installed. Cut and deburr the tubing (review "Remove the Burrs" in Step 4) to prepare it for brazing. Set up the nitrogen apparatus and connect it to the outside unit to flow nitrogen while brazing. Braze the tubing and any fittings to obtain a proper seal.
   b. Insulate the suction line completely, including the outdoor unit valves.
9. Pressure test the piping:
   a. Adjust the nitrogen apparatus to pressurize the system. Pressure test the system to a maximum of 500 psig for at least 60 minutes.

⚠ CAUTION

Only use Dry Nitrogen to pressure test refrigerant systems. The use of other gases can result in injury, property damage, or death.

10. Use a nitrogen regulator.
    a. Attach the low side gauge hose to the 5/16" Schrader valve on the outdoor unit service valve.
    b. Attach the charging hose to the regulator on the dry nitrogen tank.
    c. Preset the nitrogen regulator to 500 psi.
    d. Slowly pressurize the line set until the low side gauge reads 500 psi. Do not exceed 500 psi.
    e. Close all the valves on the nitrogen tank and gauges.
    f. Allow the pressure test to stand for a minimum of 60 minutes.
    g. If the pressure goes down in the 60-minute delay, leak check the tubing and flare fittings to identify the source of the leak. Return to Step C, above.
    h. If the pressure holds, release the nitrogen and proceed with "Step 6- Air Evacuation".

Confirmation of Indoor Unit

Table CIU-1: Units Without Electric Heat

Unit Size	Volts-Phase	Rated Current	MCA (Minimum Circuit Ampacity)	Branch Circuit	
				Min. Wire Size AWG	Fuse/CKT BKR Amps
18K	115/208/230 V-1*	115 V: 4.4 A 208/230 V: 2.5 A	115 V: 5.5 A 208/230 V: 3.5 A	14#	15.0
24K					
30K		115 V: 6.4A 208/230 V: 4.5A	115 V: 8.0 A 208/230 V: 6.0 A		
36K					
48K		115 V: 11.5A 208/230 V: 8.0A	115 V: 14.5 A 208/230 V: 10.0 A		
60K					

*The default voltage of the units is 208-203 V. If you need to switch to 115 V, please refer to the Installation Guide For AHU Using 115 V Power Supply in appendix.

Use copper wire only to connect the unit. If other than uncoated (non-plated) 75°C copper wire (solid wire for 10 AWG and smaller, stranded wire for larger than 10 AWG) is used consult applicable tables of the National Electric Code (ANSI/NFPA 70).

NOTE

The specification may be dierent between dierent models ,please refer to indoor unit's nameplate. Please choose the right cable size according to the Minimum Circuit Ampacity indicated on the nameplate of the unit. Choose the cable type according to the local electrical codes and regulations.

Step 4 - Power Wiring Connections

⚠ WARNING

BEFORE PERFORMING ANY ELECTRICAL WORK, READ THESE WARNINGS.

- All wiring must comply with local and national electrical codes and regulations and must be installed by a licensed electrician.
- All electrical connections must be made according to the Electrical Connection Diagram located on the panels of the indoor and outdoor units.
- If there is a serious safety issue with the power supply, stop work immediately. Explain your reasoning to the client, and refuse to install the unit until the safety issue is properly resolved.
- Power voltage should be within 90-110% of rated voltage. Insufficient power supply can cause malfunction, electrical shock, or fire.
- Installation of an external surge suppressor at the outdoor disconnect is recommended.
- Power must be connected, a switch or circuit breaker that disconnects all poles and has a contact separation of at least 1/8 in. (3 mm) must be incorporated into the fixed wiring. The qualified technician must use an approved circuit breaker or switch.
- Only connect the unit to an individual branch circuit. Do not connect another appliance to that circuit.
- Make sure to properly ground the air conditioner.
- Every wire must be firmly connected. Loose wiring can cause the terminal to overheat, resulting in product malfunction and possible fire.
- Do not let wires touch or rest against refrigerant tubing, the compressor, or any moving parts within the unit.
- To avoid getting an electric shock, never touch the electrical components soon after the power supply has been turned off. After turning off the power, always wait 10 minutes or more before you touch the electrical components.
- Make sure that you do not cross your electrical wiring with your signal wiring. This may cause distortion, interference or possibly damage to circuit boards.
- No other equipment should be connected.
- Connect the outdoor wires before connecting the indoor wires.

⚠ WARNING

BEFORE PERFORMING ANY ELECTRICAL OR WIRING WORK, TURN OFF THE MAIN POWER TO THE SYSTEM.

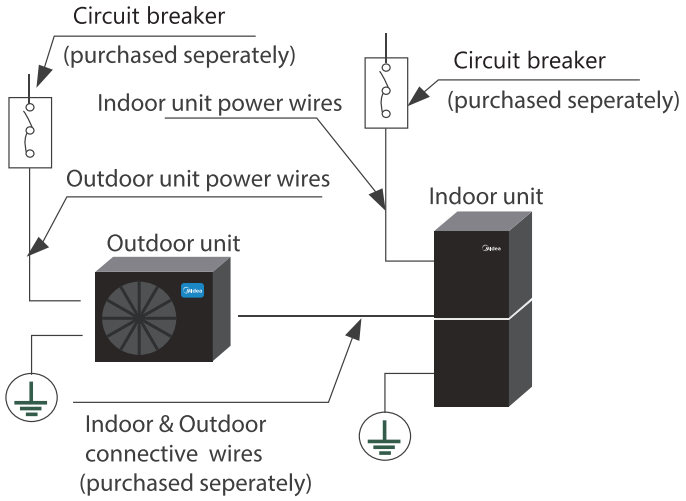

Fig. 4-1: Wiring Overview

NOTE

The diagrams are for explanation purposes only. Your machine may be slightly different. The actual diagram shall prevail.

⚠ WARNING

OUTDOOR UNIT WIRING

Before performing any electrical or wiring work, turn off the main power to the system.

Prepare the cable for connection.

1. Mount the outdoor power disconnect.
2. Run the power wiring from the main box to disconnect per NEC or CEC and local codes.
3. Remove the field wiring cover from the unit by loosening the screws.
4. Remove the caps on the conduit panel.

NOTE

- When connecting the wires, strictly follow the wiring diagram found inside the electrical box cover.
- Choose the cable type according to the local electrical switches and regulations.
- Please choose the right cable size according to the Minimum Circuit Ampacity indicated on the nameplate of the unit.

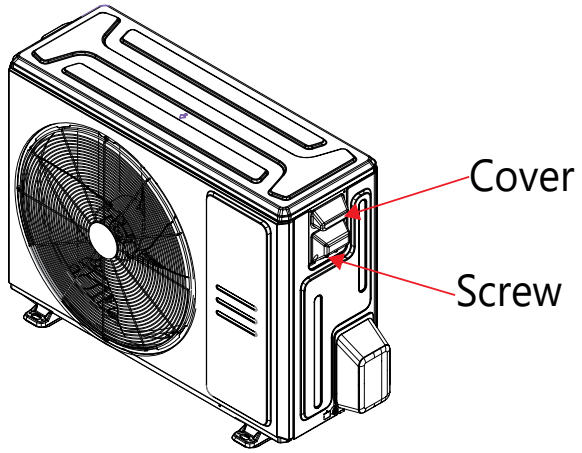

Fig. 4-2: Remove Electrical Cover

5. Connect the conduit-to-conduit panel (see Fig. 4-3).

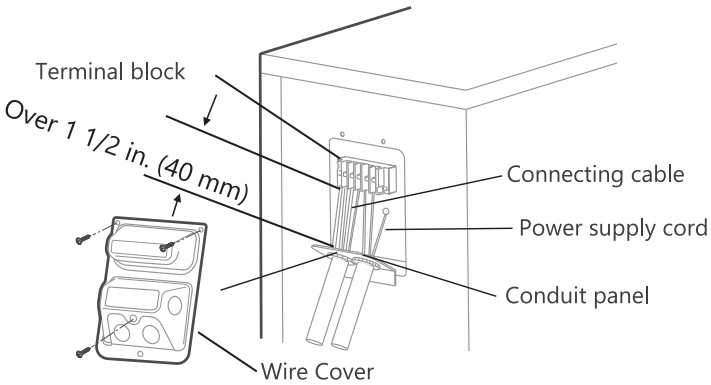

Please select the appropriate through-hole according to the diameter of the wire.

Fig. 4-3: Field Wiring Conduit Location

6. Properly connect both the power supply and control lines to the terminal block per the connection diagram for the appropriate unit capacity and voltage.
7. Ground the unit in accordance with NEC or CEC and local electrical codes.
8. Use the lock nuts to secure the conduit.
9. Reinstall the field wiring cover.

⚠ CAUTION

EQUIPMENT DAMAGE HAZARD

Failure to follow this caution may result in equipment damage or improper operation.

Be sure to comply with local codes while running wire from the indoor unit to the outdoor unit.

Every wire must be connected firmly. Loose wiring may cause the terminal to overheat or result in unit malfunction. A fire hazard may also exist. Therefore, ensure all wiring is tightly connected. No wire should be allowed to touch the refrigerant tubing, compressor, or any moving parts.

Disconnecting means must be provided and shall be located within sight and readily accessible from the air conditioner. The connecting cable with the conduit shall be routed through a hole in the conduit panel.

An approved and listed fitting must be used to securely affix conduit in accordance with NEC and local codes.

Wiring

All wires must be sized per NEC (National Electrical Code) or CEC (Canadian Electrical Code) and local codes. Use Electrical Data Table 7-3 MCA (minimum circuit amps) and MOP (maximum overcurrent protection) to correctly size the wires and the disconnect fuse or breakers respectively.

⚠ CAUTION

INDOOR UNIT WIRING

- While connecting the wires, please strictly follow the wiring diagram.
- The refrigerant circuit can become very hot. Keep the interconnection cable away from the copper tube.

Prepare the cable for connection.

1. Using wire strippers, strip the insulating jacket from both ends of the signal cable to reveal about 5.9 in. (150 mm) of the wire.
2. Strip the insulation from the ends of the wires.

Open the front panel of the indoor unit.

Using a screwdriver, remove the cover of the electric control box from your indoor unit.

Connect the wires to the terminals.

1. Thread the power cable and the signal cable through the wire outlet
2. Match the wire colors/labels with the labels on the terminal block. Firmly screw the wires of each wire to its corresponding terminal. Refer to the Serial Number and Wiring Diagram located on the cover of the electric control box. Terminal block wiring. When using 208 V or 230 V,connect L1 and L2. When using 115 V,connect L1 and L2 (L2 is used as N).

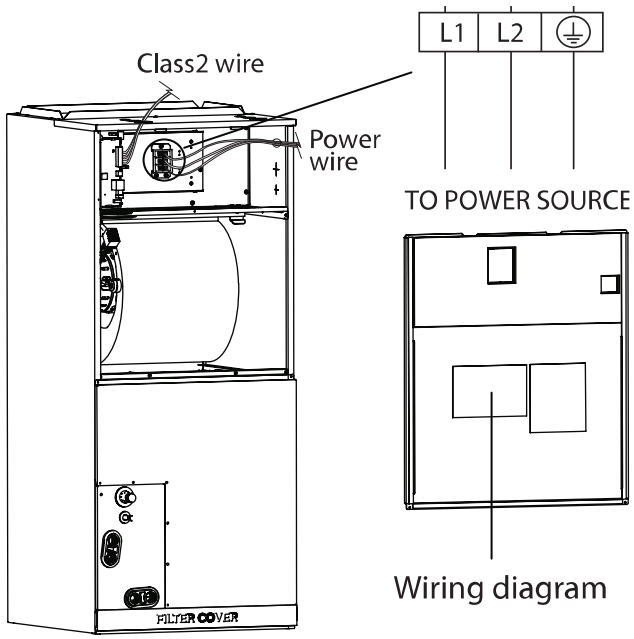

Fig. 4-6: Power Wiring Location

⚠ WARNING

ISOLATE THE POWER SUPPLY LEADS AND COMMUNICATION LEADS BY THE STRAIN RELIEF AND KEEP POWER SUPPLY LEADS AWAY FROM COMMUNICATION LEADS.

3. Clamp down the cable with the cable clamp. The cable must not be loose or pull on the U-lugs.
4. Reattach the electric box cover.
5. Clamp down the cable with the cable clamp. The cable must not be loose or pull on the U-lugs.
6. Reattach the electric box cover.

⚠ CAUTION

- While connecting the wires, please strictly follow the wiring diagram.
- The refrigerant circuit can become very hot. Keep the interconnection cable away from the copper tube.
- The holes on the cover of the electronic control box must be threaded through with armored wires.

NOTE

While bundling these items together, **DO NOT** intertwine or cross the signal cable with any other wiring.

Step 5 - Specific Wiring Methods

⚠ WARNING

Please refer to the wiring nameplate for the wiring method. Do not connect the power cord to the communication line, as this may damage the system.

Table 5-1: Communication Wiring Sizes

Option	Communication Type	Reocommended Cable Size
1	Non-Polarity RS485 Communication (S1 - S2)	20 AWG (stranded shielded)
2	24 V communication	18 AWG 8 conductor thermostat wire

⚠ WARNING

EQUIPMENT DAMAGE HAZARD

Failure to follow this caution may result in equipment damage or improper operation. Wires should be sized based on NEDC and local codes.

NOTE

- Do not use the thermostat wire for any RS-485 connection between indoor and outdoor units.
- All connections between the indoor and outdoor units must be made as shown in Fig. 6-3

Power needs to be OFF before dip switch adjustments.

⚠ CAUTION

EQUIPMENT DAMAGE HAZARD

Failure to follow this caution may result in equipment damage or improper operation. Be sure to comply with local codes while running wire from the indoor unit to the outdoor unit. Every wire must be connected firmly. Loose wiring may cause the terminal to overheat or result in unit malfunction. A fire hazard may also exist. Ensure all wiring is tightly connected.

⚠ WARNING

No wire should touch the refrigerant tubing, compressor or any moving parts. Disconnecting means must be provided and shall be located within sight and readily accessible from the air conditioner. Connecting cable with conduit shall be routed through the hole in the conduit panel.

Table 5-2: Wiring Color Guide

THERMOSTAT				INDOOR UNIT		OUTDOOR UNIT
Heat - 2nd stage	W2	WHITE	→	W2	→	N/C
Emergency Heat - 1st stage	W1/E	BLACK	→	W1	→	D
		N/C		E		
		N/C		W		W
4 Way Valve	B	ORANGE	→	B	→	B
Cool - 2nd stage	Y2	BROWN	→	Y2	→	Y2
Cool - 1st stage	Y	YELLOW	→	Y	→	Y
Fan	G	GREEN	→	G	→	G
	L	GRAY	→	L	→	L
Power Common	C	BLUE	→	C	→	C
Power	R	RED	→	R	→	R
	DH	PURPLE	→	DH	→	N/C

Note

The adapter cable must be used when applying the full 24 V communication scheme. This will stop the operation of the outdoor unit for safety if refrigerant leakage happens.

Scenario 1: EVOX Heat Pump and Air Handler 3rd Party 24 V Thermostat

Matchup	Thermostat	Wiring	AHU SW1	ODU SW
Midea AHU+Midea ODU 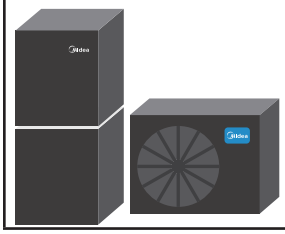	3rd Party 24 V Thermostat	24 V communication* 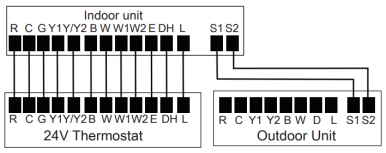	ON 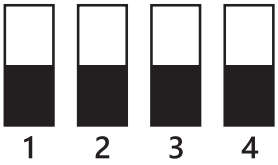	ON 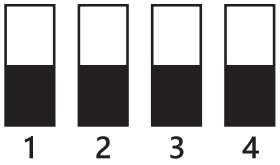

*This is a general wiring diagram. Use the diagram that comes with your selected 24 V thermostat.

Fig. 5-1: Scenario 1 Wiring Diagram and Dip Switch Settings

- The IDU and ODU need separate power or are from the ODU. See Step 4 - Power Wiring Connections.
- Bi Communication (IDU SW1-1&-4 and ODU SW-1) auto recognize
- IDU and ODU need 2 non-polarities (5 V RS485 communication through S1 S2)
- IDU and Thermostat Controller Communicate with 24 VAC signal
- Even in retrofit cases, there is no need to change the wire set (use the existing 24 V thermostat wire)
- Factory Default Setting on all Dip Switches are OFF
- When connecting a wired controller and 24 V thermostat will take a 24 V signal as a priority

Scenario 2: EVOX Heat Pump, Air Handler, and RS485 Communication

Matchup	Thermostat	Wiring	AHU SW1	ODU SW
Midea AHU+Midea ODU 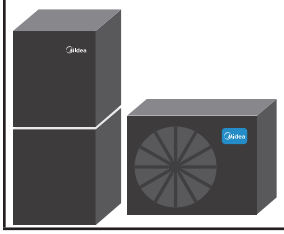	Midia Wired Thermostat	Non-polarity RS485 communication 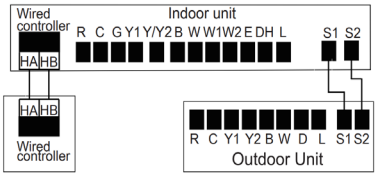	ON 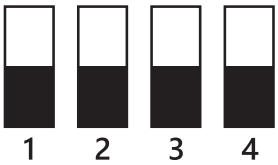	ON 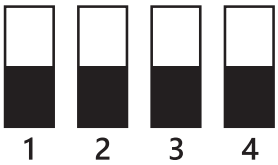

Fig. 5-2: Scenario 2 Wiring Diagram and Dip Switch Settings

- The IDU and ODU need separate power or are from the ODU. See Step 4 - Power Wiring Connections.
- IDU and ODU need 2 non-polarity (5 V RS485 S1 and S2 communication)
- IDU and Midea wired controller (HA & HB with 20 VDC)

NOTE

HA & HB is RS485 communication and cannot use 16 AWG wire as it will not fit the wired controller.

- Even in the retrofit case we don't need to change the wire set (use the existing 24 V thermostat wire)
- Factory Default Setting on all Dip Switches are OFF
- When connecting a wired controller and 24 V thermostat will take a 24 V signal as a priority

Scenario 3: Self-Adapt Mode with 3rd Party Equipment

Matchup	Thermostat	Wiring	AHU SW1	ODU SW
Midea AHU+Brand ODU 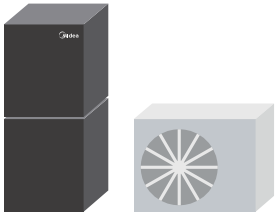	3rd Party 24 V Thermostat	24 V communication 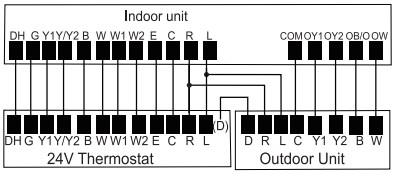	ON 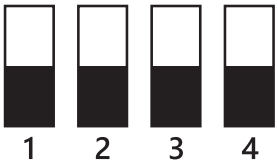	Other Brand Outdoor Unit
Brand AHU+Midea ODU 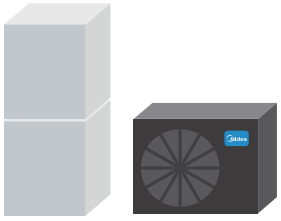	3rd Party 24 V Thermostat	24 V communication 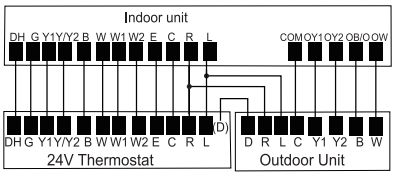	Other Brand Air Handling Unit	ON

NOTE

For Brand AHU+Midea ODU, the 24V thermostat needs to be connected to a mainboard with a refrigerant sensor, and it should be able to cut off power to the outdoor unit in case of refrigerant leakage. Otherwise, there will be a risk of refrigerant leakage.

Fig. 5-3: Scenario 3 Wiring Diagram and Dip Switch Settings

- The IDU and ODU need separate power or are from the ODU. See Step 4 - Power Wiring Connections or the 3rd party unit's instructions.
- IDU and ODU without any wire communication
- IDU and ODU control by 24 V thermostat (24 VAC)
- Factory Default Setting on all Dip Switches is OFF
- When the connected wired controller and 24 V thermostat will take the 24 V signal as a priority.

24 V Connection Diagrams

Table 5-4: Control Logic

Terminal	Location	Function
R	Thermostat/Indoor Unit/Outdoor Unit	24 V Power Connection
C	Thermostat/Indoor Unit/Outdoor Unit	Common
G	Indoor Unit	Fan Control
Y1	Thermostat/Indoor Unit/Outdoor Unit	Low Demand
Y2	Thermostat/Indoor Unit/Outdoor Unit	High Demand
B	Thermostat/Indoor Unit/Outdoor Unit	Heating Reversing Valve
W	Thermostat/Indoor Unit/Outdoor Unit	Heating Control
W1	Thermostat/Indoor Unit	Stage 1 Electric Heating
W2	Thermostat/Indoor Unit	Stage 2 Electric Heating
E/AUX	Indoor Unit	Emergency Heating
D	Outdoor Unit	Defrost - (24 V output signal)
L	Thermostat/Indoor Unit/Outdoor Unit	System Fault - (24 V output signal)
DH/BK	Thermostat/Indoor Unit	Dehumidification/Zoning Control
DS	Indoor Unit	Reserved Signal
W2	Thermostat/Indoor Unit	Second Stage Heating

NOTE

Terminal D is now energized when the outdoor unit goes into defrost mode and can be used to enable electric heat. This feature is unavailable when the outdoor unit communicates with the indoor unit via non-polarity RS485 Communication S1-S2.

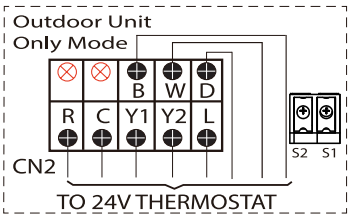

24 V must never be connected to S1 – S2. All wiring must be in compliance with the above scenarios. Incorrect wiring will cause irreversible damage to the control.

Fig. 5-4: Never Connect 24 V to S1-S2

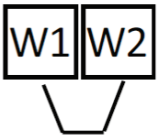

S4-1:
Default ON: For single-stage supplemental heat, W1 and W2 are connected.
OFF: W1 and W2 are controlled independently for dual-stage supplemental heat. feature is enabled through the thermostat.

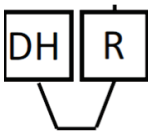

S4-2:
Default ON: Dehumidification control not available.
OFF: The dehumidification feature is enabled through the thermostat.

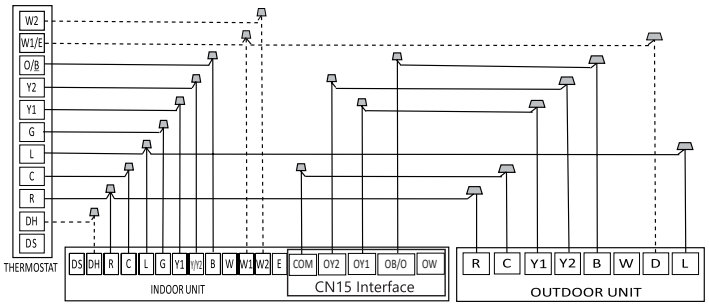

S4-2 Default on, DH function off. Turn switch off to activate DH function.

S4-4 Default on, W1 and W2 shorted for single stage Aux heat operation. Turn off to separate stages.

Fig. 5-5: Wiring for 4H and 2C Thermostat

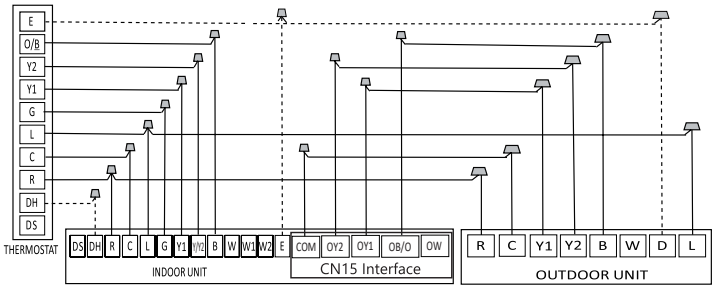

S4-2 Default on, DH function off. Turn switch off to activate DH function.

Emergency heating control two groups of electric heating at the same time

Fig. 5-6: Wiring for 3H and 2C Thermostat

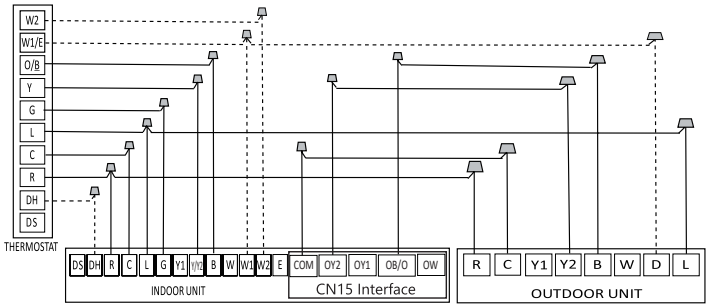

S4-2 Default on, DH function off. Turn switch off to activate DH function.

S4-4 Default on, W1 and W2 shorted for single stage Aux heat operation. Turn off to separate stages.

Fig. 5-7: Wiring for 3H and 1C Thermostat

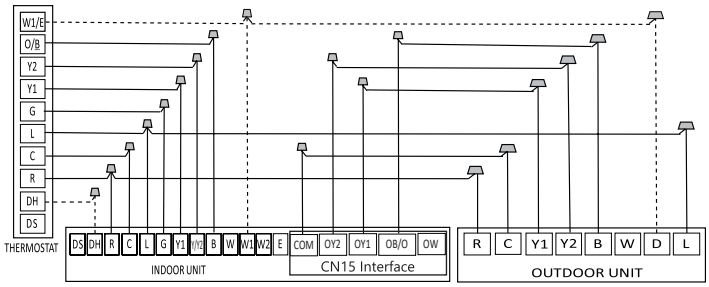

S4-2 Default on, DH function off. Turn switch off to activate DH function.

S4-4 Default on, W1 and W2 shorted for single stage Aux heat operation. Turn off to separate stages.

Fig. 5-8: Wiring for 2H and 2C Thermostat No Auxilary Heat

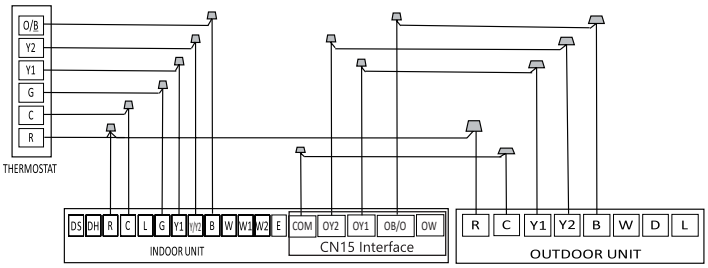

Fig. 5-9: Wiring for 3H and 2C Thermostat

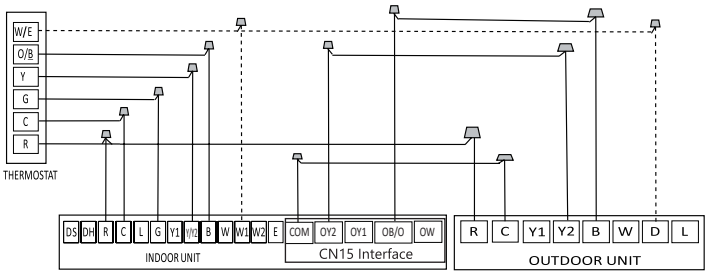

S4-4 Default on, W1 and W2 shorted for single stage Aux heat operation. Turn off to separate stages.

Fig. 5-10: Wiring for 2H and 1C Thermostat

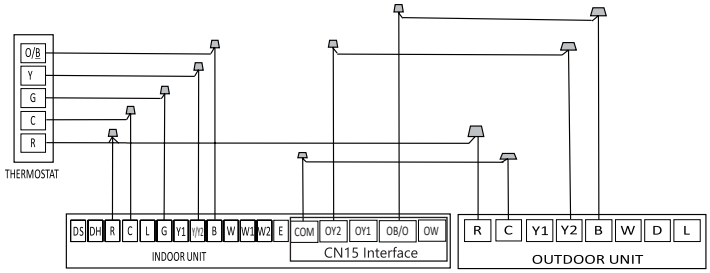

Fig. 5-11: Wiring for 1H and 1C Thermostat

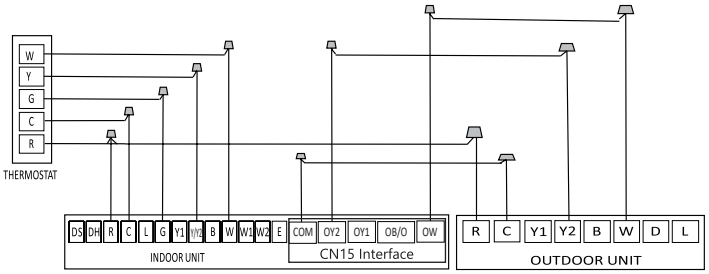

Fig. 5-12: Wiring for 1H and 1C Thermostat

NOTE

This is the least preferred method of control wiring and should only be used in emergencies. It may not achieve full capacity.

NOTE

If the outdoor condensing unit initiates defrost cycles frequently, then it is recommended to adjust the "thermal balance point" to a temperature that would decrease the recurrence of these cycles and prevent cold air from blowing during the duration of the defrost cycle. The thermal balance point is the outdoor ambient temperature at which the heat pump can no longer provide sufficient heating to the space on its own and compromises the reliability of the compressor.

Optional function wiring

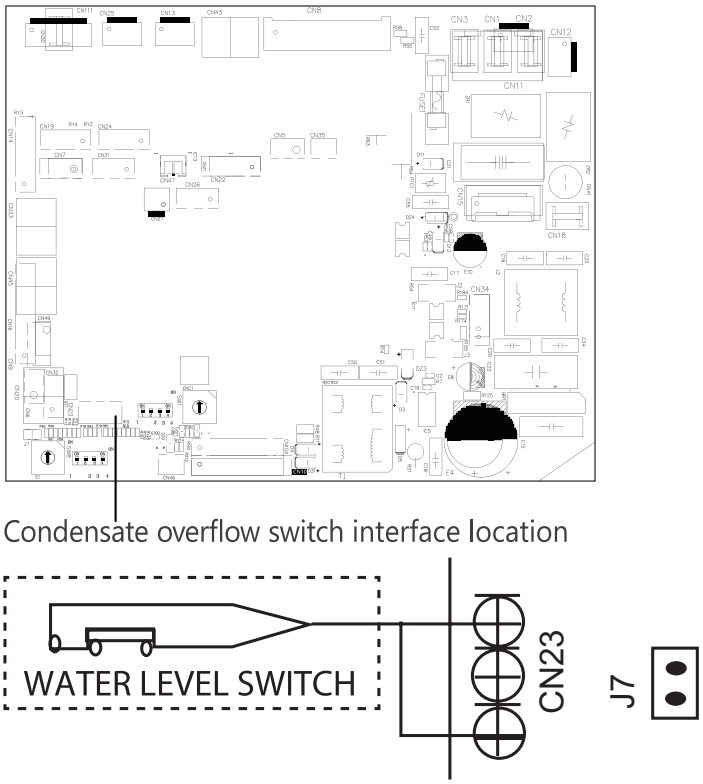

Fig. 5-13: Condensate Overflow Location

Condensate overflow switch:

The unit will accommodate a remote condensate overflow switch. To enable, remove jumper J7, and connect the installer-provided condensate overflow device to CN23 per below. When an overflow condition is present, the device should open the connection signaling the unit to turn off the system.

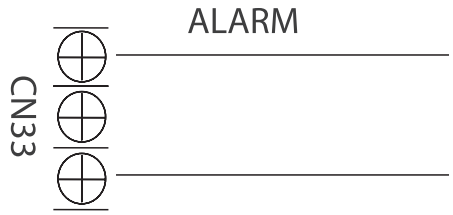

Fig. 5-14: Alarm Wiring

Alarm output:

An alarm output (CN33) can be utilized if actions are required when a fault is present. This is a passive outlet port, so you will need to input a voltage signal. The relay is normally open for normal operation and closed when the fault condition is active.

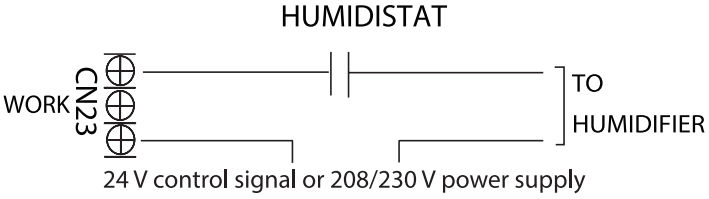

Fig. 5-15: Humidifier Wiring

Humidifier control:
To connect a humidifier, utilize the passive signal "WORK" output (CN23) port as well as the R and C wires on the controller, and wire the humidistat and humidifier per the above wiring diagram. When the fan is running, the CN23 relay will be closed, which will allow power to the humidifier when the humidistat is below the humidity setpoint. If the thermostat or zone controller has a HUM interface, connect the humidifier directly to the HUM and C ports.

UV,fresh air or ion generator wiring

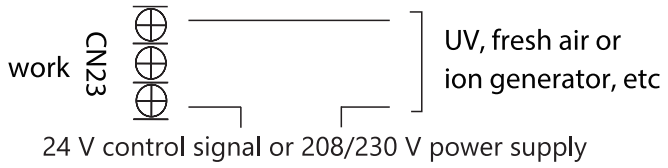

Fig. 5-16: Clean Air Wiring

UV, fresh air, or ion generator:
The WORK port is linked to the fan. When the fan is running, the relay is closed.

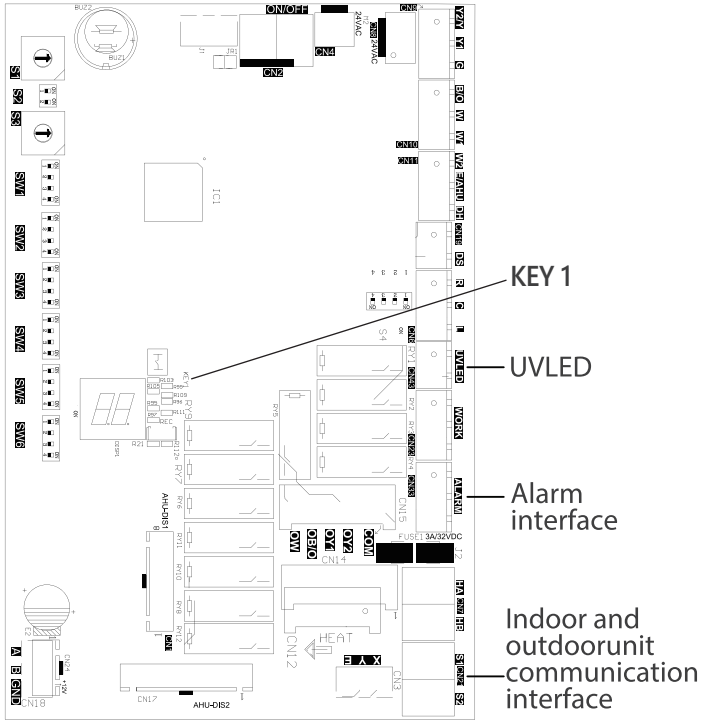

Fig. 5-17: Interface Wiring Locations

LED Display
The control displays unit status as well as any active fault codes on the LED display. If the unit is functioning normally, the LED will display the current temperature setpoint. When a fault code is active, the display will flash quickly the active fault code. Please refer to the fault code table located in the troubleshooting section of the manual for detailed fault code information.

KEY1 Instructions (For Wired Controller only)

- Press KEY1 to enter the forced automatic mode, press KEY1 again to enter the forced cooling mode (LED display FC), and press KEY1 again to shut down.
- Long press KEY1 under forced cooling mode (LED display FC) 5s to enter forced defrost mode.

DIP switch definitions

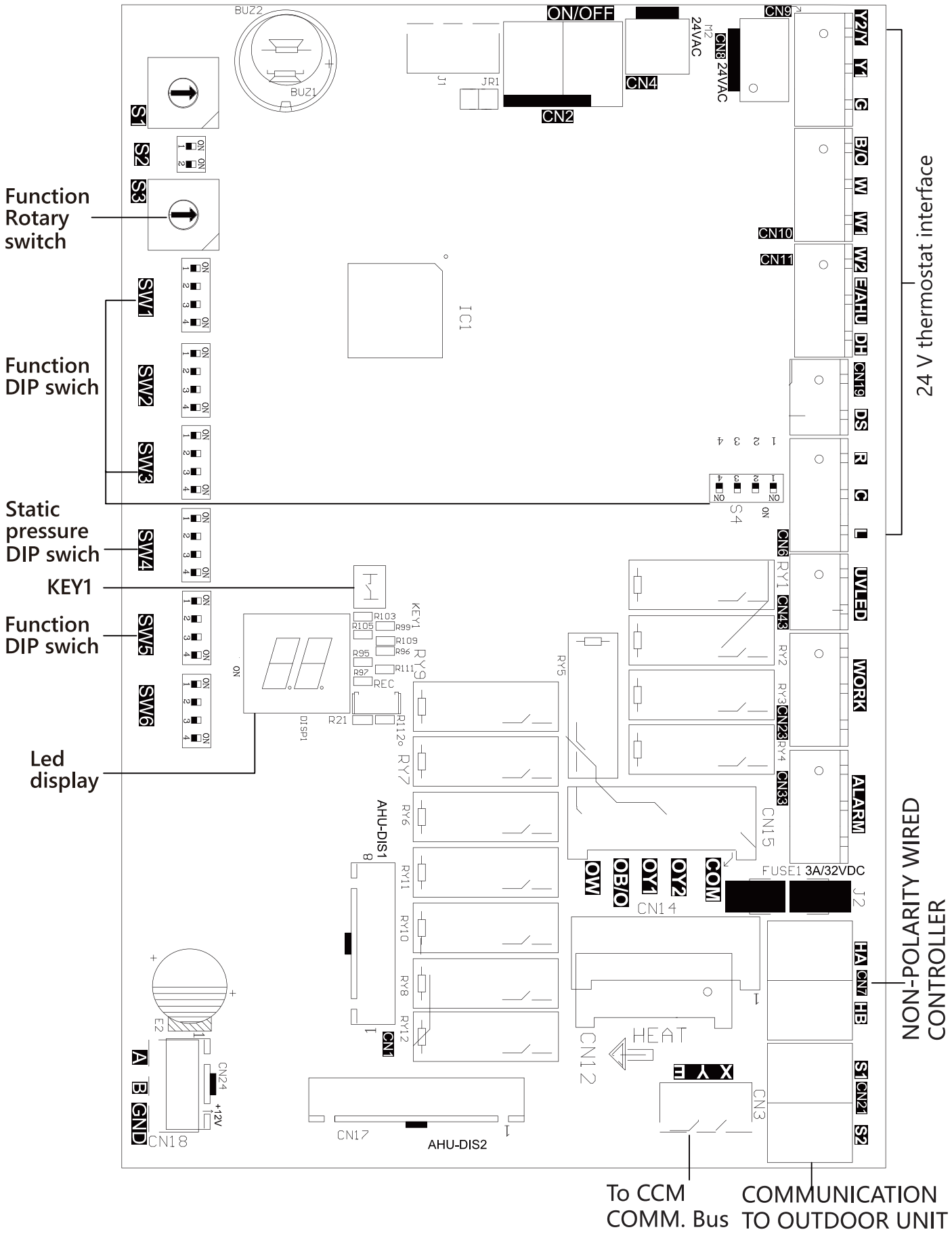

Fig 5-18: Dip Switch Layout

Function DIP switch settings:

The 24 V thermostat mode needs to refer to the following settings:

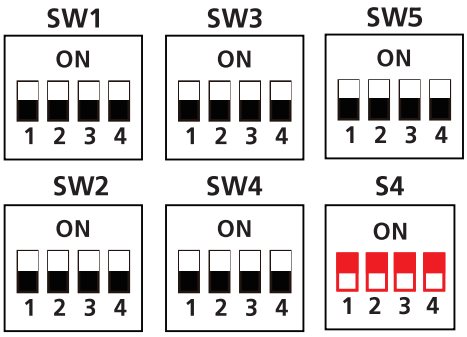

SW4-1	000 is the default 000/001/010/011/100/101/110/111, internal machines with different abilities, electric heating, and PSC classification for use.
SW4-2	
SW4-3	

Fig. 5-19: 24 V Thermostat Settings

Table 5-5: Function combination table of SW1-1 and SW1-4

SW1	Control Type	IDU & ODU Connection	Note
ON 1 2 3 4	Wired controller / 24 V thermostat	(S1+S2) / 24 V connection (S1+S2) / 24 V connection	Auto Discovery
ON 1 2 3 4	Wired controller	S1+S2	Scenario 2
ON 1 2 3 4	24 V Thermostat	S1+S2	Scenario 1
ON 1 2 3 4	24 V Thermostat	24 V connection	Scenario 3

Table 5-6: Indoor Unit Dial Code

No.	Dial Code	Control Scenario	Function	ON	OFF	Note
1	SW1-2	1,2,3	Anti-cold blow protection option	NO	[Default] YES	
2	SW1-3	1,2,3	Single cooling / heating and cooling options	Cooling	[Default] Cooling & Heating	
3	SW2-1	1	Compressor Running (demand working with heat pump+ Electric heat)	Compressor slower speed	[Default] Faster Compressor	Only afects compressor and W1
4	SW2-1	2	Temperature diferential to activate first stage auxiliary heat (the GAP of T1 and Ts), Wire controller demand with heat pump+Electric heat working together	2°F (1°C)	[Default] 4°F (2°C)	
5	SW2-2	2	Electric heat on delay	YES	[Default]NO	
6	SW2-3	2	Electric auxiliary heating delay to start time	30 minutes	[Default] 15 minutes	Based on SW2-2 is ON
7	SW2-4	1	Compressor	The operation of heat pump is limited by the outdoor temperature, and the operation of auxiliary heat is not limited.The system makes judgments according to the following rules: 1) The compressor can be operated when the outdoor temperature is ≥S3 DIP switch temperature +2 °C. 2) The compressor cannot be operated when the outdoor temperature is lower than the S3 DIP switch temperature.	[Default]The operation of heat pump is limited by the outdoor temperature, and the operation of auxiliary heat is not limited. The system makes judgments based on the following rules: 1) The compressor cannot be operated when the outdoor temperature is lower than the S3 DIP switch. 2) The compressor can be operated when the outdoor temperature is ≥S3 DIP switch temperature +2 °C.	SW2-4 and S3 need to working together
8	SW2-4	2	Compressor/Auxiliary heat outdoor ambient lockout	The operation of heat pump is limited by the outdoor temperature, and the operation of auxiliary heat is not limited. The system makes judgments according to the following rules: 1) The compressor can be operated when the outdoor temperature is ≥S3 DIP switch temperature +2 °C. 2) The compressor cannot be operated when the outdoor temperature is lower than the S3 DIP switch temperature.	[Default]Only one heat pump or auxiliary heat can be operated .The system makes judgments according to the following rules: 1) When the outdoor temperature is lower than the S3 DIP switch temperature,the compressor is not allowed to operated, but auxiliary heat is allowed to operated ; 2) When the outdoor temperature is ≥S3 DIP switch temperature +2 (°C), the compressor can be operated, but auxiliary heat cannot be operated.	
9	Rotary Switch S3	1,2	Set outdoor temperature Limitation (for auxiliary heating or compressor)	See Table 5-8: Table A		

Table 5-6: Indoor Unit Dial Code (continued)

No.	Dial Code	Control Scenario	Function	ON	OFF	Note
10	SW3-1	1	Maximum continuous runtime allowed before system automatically stages up capacity to satisfy set point. This adds 1 to 5°F to the user set point in the calculated control point to increase capacity and satisfy user set point	30 minutes	[Default] 90 minutes	
11	SW3-2	1	Cooling and heating Y/Y2 temperature diferential adjustment.	Compressor slower speed	[Default] Faster Compressor	Only afects compressor
12	SW3-3	1	Compressor Running (demand working with heat pump+ Electric heat)	Compressor slower speed	[Default] Faster Compressor	Only afects compressor and W2
13	SW3-3	2	Temperature diferential to activate second stage auxiliary heating (the GAP of T1 and Ts)Wire controller demand with heat pump+Electric heat working together	4°F (2°C)	[Default] 6°F (3°C)	
14	SW3-4	1,3	Fan speed of cooling mode when 24 V Thermostat is applied for.	Turbo	High	
15	SW4-1 SW4-2 SW4-3	1,2,3	Electric heat nominal CFM adjustment	Available settings are 000/001/010/011. Each digit corresponds to an indiviual swith position. For example [SW4-1 OFF, SW4-2 ON, SW4 -3 OFF] = 010		
16	SW4-4	2	Temperature diferential to activate third stage auxiliary heating (the GAP of T1 and Ts) Wire controller demand with heat pump+ Electric heat working together	6°F (3°C)	[Default] 8°F (4°C)	Only valid for product which has three stage auxiliary heating.
17	S4-4	1,3	Default ON	[Default] For single stage supplemental heat,W1 and W2 are connected	For dual stage supplemental heat, W1 and W2 are controlled independently.	
18	S4-2	1,3	DH function selection	[Default] Dehumidification control not available	Dehumidification feature is enabled through thermostat	
19	SW5-3	1,2,3	L or Alarm relay selection	L output 24 V or alarm relay close only when refrigerant sensor fault or R454B refrigerant leakage be detected	[default] L output 24 V or alarm relay close when any fault be detected	
20	SW5-4	1,2,3	R output selection	R stop ouput 24 V when refrigerant sensor fault or R454B refrigerant leakage be detected	[default] R keep ouput 24 V even when refrigerant sensor fault or R454B refrigerant leakage be detected	

Control Scenario	24 V Tstat, S1+S2	1
	Wired Controller S1+S2	2
	Full 24 V	3

Address DIP switch:

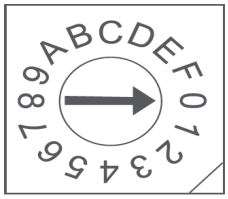

Address dialing S1+SW8: When the user uses the centralized controller, address dialing is required.

Network address: The address silkscreen is the NET address, which is composed of a 16-bit address rotary code S1 plus a two-digit DIP switch SW8 [Set during engineering installation, no network function does not need to be set]

When SW8 is 00 (the dialing code is not connected), the network address value is the value of S1.

When SW8 is 10 (corresponding to the switch of the hardware connected to the 10K resistor), the network address value is S1 plus 16.

Determined by dial code SW8 1-10K 2-5.1K

When SW8 is 01 (corresponding to the dialing code of the 5.1K resistor connected to the hardware is turned on), the network address value is the value of S1 plus 32.

When SW8 is 11 (all dialing codes are on), the network address value is the value of S1 plus 48.

Table 5-7: Determined by dial code SW8 1-10K 2-5.1K

Dial Code Selection	Website Address
	S1 + 48
	S1 + 32
	S1 + 16
	S1

Table 5-8: Table A

S3	S3 (°F)	S3 (°C)
O	OFF	OFF
1	-22	-30
2	-18	-30
3	-15	-26
4	-11	-24
5	-8	-22
6	-4	-20
7	3	-16
8	10	-12
9	18	-8
A	25	-4
B	32	0
C	36	2
D	39	4
E	43	6
F	46	8

Step 6 - Air Evacuation

Please refer to the outdoor unit manual for details.

Step 7 - Insulate the Piping

After the unit is installed and tested, wrap the piping and brass fittings with foam tape.

You will need to wrap all the connected copper pipes into the insulation.

Wrap insulation around the piping. Direct contact with the bare piping may result in burns or frostbite. Ensure the pipe is properly connected. Over-tightening may damage the bell mouth and under-tightening may lead to leakage.

Insulation material selection for refrigerant pipe

- The burning performance should be over 248°F/120°C.
- Choose insulation materials according to local laws.

Table 7-1: Recommended Insulation Thickness

Humidity<80% RH	Humidity ≥80% RH
3/8 in./10 mm	5/8 in./15 mm

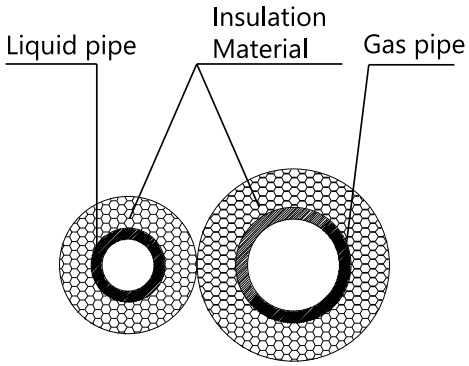

Fig. 7-1: Insulate Both Pipes Separately

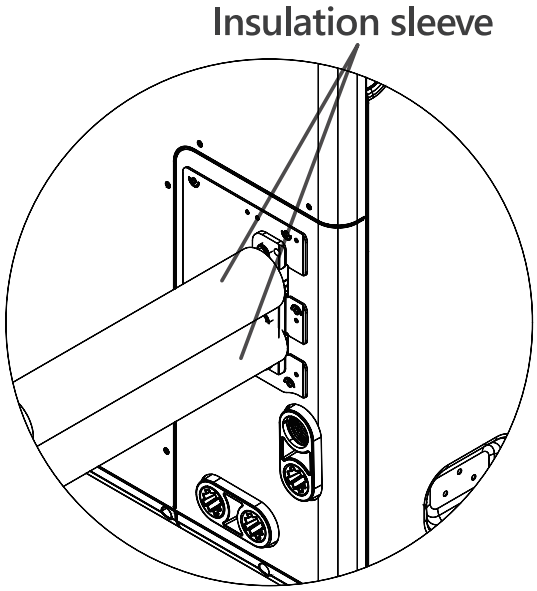

Fig. 7-2: Insulate All Connections

- Gas and liquid pipes must be insulated separately. Insulating them together will decrease the performance of the air conditioner.
- The insulation material at the joint pipe shall be 2-4 in./5-10 cm longer than the gap of the insulation material.
- The insulation material at the joint pipe shall be inserted into the gap of the insulation material.
- The joint pipe's insulation material shall be tightly banded to the gas and liquid pipes.

Be sure not to bind the insulation material or over-tighten it, this may compress the air in the material, cause bad insulation, and cause early decay of the material.

Insulation of drainage pipe

The temperature of condensate drainage water is very low. If the insulation is not enough, it will form dew and leak. This can cause damage to ceilings or walls.

Insulation material selection for drainage pipe

- The insulation material should be made of flame retardant material, and the flame retardancy of the material should be selected according to the local law.
- The thickness of the insulation layer is usually above 3/8 in. / 10 mm.
- Use specific glue to paste the seam of insulation material, and then bind with adhesive tape. The width of the tape shall not be less than 2 in./5 cm.
- The single pipe should be insulated before connecting to another pipe, the joint part should be insulated after the drainage test.
- There should be no insulation gap between the insulation material.

Test Run

⚠ CAUTION

Failure to perform the test run may result in unit damage, property damage, or personal injury.

Before the Test Run

A test run must be performed after the entire system has been completely installed. Confirm the following points before performing the test:

a. Indoor and outdoor units are properly installed.
b. Piping and wiring are properly connected.
c. No obstacles near the inlet and outlet of the unit that might cause poor performance or product malfunction.
d. The refrigeration system does not leak.
e. The drainage system is unimpeded and draining to a safe location.
f. Heating insulation is properly installed.
g. Grounding wires are properly connected.
h. Length of the piping and additional refrigerant capacity have been recorded.
i. Power voltage is the correct voltage for the air conditioner

Test run Instructions

1. Open both the liquid and gas service valves.
2. Turn on the main power switch and allow the unit to warm up.
3. Set the air conditioner to COOL mode.
4. For the Indoor Unit
   a. Double-check to see if the room temperature is being registered correctly.
   b. Check to see that the drainage system is unimpeded and draining smoothly.
   c. Ensure there is no vibration or abnormal noise during operation.
5. For the Outdoor Unit
   a. Check to see if the refrigeration system is leaking.
   b. Make sure there is no vibration or abnormal noise during operation.
   c. Ensure the wind, noise, and water generated by the unit do not disturb your neighbors or pose a safety hazard.
6. Drainage Test
   a. Ensure the drainpipe flows smoothly. New buildings should perform this test before finishing the ceiling.
   b. Turn on the main power switch and run the air conditioner in COOL mode.
   c. Check to see that the water is discharged. It may take up to one minute before the unit begins to drain depending on the drainpipe.
   d. Make sure that there are no leaks in any of the piping.
   e. Stop the air conditioner. Turn off the main power switch and reinstall the test cover.

NOTE

If the unit malfunctions or does not operate according to your expectations, please refer to the Troubleshooting section of the Service Manual before calling customer service.

Appendix

Table AP-1: Air Volume Table

Capacity	External Static Pressure Range	Fan speed	Electric auxiliary heat module	24 V thermostat		Wired controller		Airflow volume (CFM)
				DIP Switch	24 V terminal engaged	DIP Switch	Mode	
18K (1.5 Ton)	0 - 0.8 in. wc.	Cooling Turbo	—	SW3-4=ON	Y2/Y	—	Cool	618
		Cooling High	—	SW3-4=OFF	Y2/Y	—	Cool	576
		Cooling Medium	—	—	Y1	—	Cool	529
		Cooling Low	—	—	—	—	Cool	488
		Heat Pump Turbo	—	—	—	—	Heat	565
		Heat Pump High	—	—	B+Y2/Y, W	—	Heat	541
		Heat Pump Medium	—	—	Y1	—	Heat	435
		Heat Pump Low	—	—	—	—	Heat	400
		Electric auxiliary heat module 0 (Default)	10 kW	SW4-1=OFF SW4-2=OFF SW4-3=OFF	W1, W2, AUX	SW4-1=OFF SW4-2=OFF SW4-3=OFF	Heat + AUX, AUX	882
		Electric auxiliary heat module 1	10 kW, 8 kW	SW4-1=OFF SW4-2=OFF SW4-3=ON	W1, W2, AUX	SW4-1=OFF SW4-2=OFF SW4-3=ON	Heat + AUX, AUX	624
		Electric auxiliary heat module 2	8k W	SW4-1=OFF SW4-2=ON SW4-3=OFF	W1, W2, AUX	SW4-1=OFF SW4-2=ON SW4-3=OFF	Heat + AUX, AUX	594
		Electric auxiliary heat module 3	5 kW, 3 kW	SW4-1=OFF SW4-2=ON SW4-3=ON	W1, W2, AUX	SW4-1=OFF SW4-2=ON SW4-3=ON	Heat + AUX, AUX	565
24K (2 Ton)	0 - 0.8 in. wc.	Cooling Turbo	—	SW3-4=ON	Y2/Y	—	Cool	824
		Cooling High	—	SW3-4=OFF	Y2/Y	—	Cool	759
		Cooling Medium	—	—	Y1	—	Cool	694
		Cooling Low	—	—	—	—	Cool	629
		Heat Pump Turbo	—	—	—	—	Heat	788
		Heat Pump High	—	—	B+Y2/Y, W	—	Heat	753
		Heat Pump Medium	—	—	Y1	—	Heat	641
		Heat Pump Low	—	—	—	—	Heat	524
		Electric auxiliary heat module 0 (Default)	15 kW	SW4-1=OFF SW4-2=OFF SW4-3=OFF	W1, W2, AUX	SW4-1=OFF SW4-2=OFF SW4-3=OFF	Heat + AUX, AUX	988
		Electric auxiliary heat module 1	15 kW, 10 kW	SW4-1=OFF SW4-2=OFF SW4-3=ON	W1, W2, AUX	SW4-1=OFF SW4-2=OFF SW4-3=ON	Heat + AUX, AUX	841
		Electric auxiliary heat module 2	10 kW, 8 kW	SW4-1=OFF SW4-2=ON SW4-3=OFF	W1, W2, AUX	SW4-1=OFF SW4-2=ON SW4-3=OFF	Heat + AUX, AUX	818
		Electric auxiliary heat module 3	5 kW	SW4-1=OFF SW4-2=ON SW4-3=ON	W1, W2, AUX	SW4-1=OFF SW4-2=ON SW4-3=ON	Heat + AUX, AUX	788
30K (2.5 Ton)	0 - 0.8 in. wc.	Cooling Turbo	—	SW3-4=ON	Y2/Y	—	Cool	988
		Cooling High	—	SW3-4=OFF	Y2/Y	—	Cool	894
		Cooling Medium	—	—	Y1	—	Cool	806
		Cooling Low	—	—	—	—	Cool	712
		Heat Pump Turbo	—	—	—	—	Heat	988
		Heat Pump High	—	—	B+Y2/Y, W	—	Heat	894
		Heat Pump Medium	—	—	Y1	—	Heat	806
		Heat Pump Low	—	—	—	—	Heat	712
		Electric auxiliary heat module 0 (Default)	15 kW	SW4-1=OFF SW4-2=OFF SW4-3=OFF	W1, W2, AUX	SW4-1=OFF SW4-2=OFF SW4-3=OFF	Heat + AUX, AUX	1088
		Electric auxiliary heat module 1	15 kW, 10 kW	SW4-1=OFF SW4-2=OFF SW4-3=ON	W1, W2, AUX	SW4-1=OFF SW4-2=OFF SW4-3=ON	Heat + AUX, AUX	1029
		Electric auxiliary heat module 2	10 kW, 8 kW	SW4-1=OFF SW4-2=ON SW4-3=OFF	W1, W2, AUX	SW4-1=OFF SW4-2=ON SW4-3=OFF	Heat + AUX, AUX	976
		Electric auxiliary heat module 3	5 kW	SW4-1=OFF SW4-2=ON SW4-3=ON	W1, W2, AUX	SW4-1=OFF SW4-2=ON SW4-3=ON	Heat + AUX, AUX	918

NOTE

The static pressures at the full required air flow used for AHRI testing is 0.8 in. wc. (200 Pa).

Capacity	External Static Pressure Range	Fan speed	Electric auxiliary heat module	24 V thermostat		Wired controller		Airflow volume (CFM)
				DIP Switch	24 V terminal engaged	DIP Switch	Mode	
36K (3 Ton)	0 - 0.8 in. wc.	Cooling Turbo	—	SW3-4=ON	Y2/Y	—	Cool	1235
		Cooling High	—	SW3-4=OFF	Y2/Y	—	Cool	1147
		Cooling Medium	—	—	Y1	—	Cool	1059
		Cooling Low	—	—	—	—	Cool	971
		Heat Pump Turbo	—	—	—	—	Heat	1235
		Heat Pump High	—	—	B+Y2/Y, W	—	Heat	1147
		Heat Pump Medium	—	—	Y1	—	Heat	1059
		Heat Pump Low	—	—	—	—	Heat	971
		Electric auxiliary heat module 0 (Default)	20 kW	SW4-1=OFF SW4-2=OFF SW4-3=OFF	W1, W2, AUX	SW4-1=OFF SW4-2=OFF SW4-3=OFF	Heat + AUX, AUX	1306
		Electric auxiliary heat module 1	15 kW	SW4-1=OFF SW4-2=OFF SW4-3=ON	W1, W2, AUX	SW4-1=OFF SW4-2=OFF SW4-3=ON	Heat + AUX, AUX	1241
		Electric auxiliary heat module 2	10 kW, 8 kW	SW4-1=OFF SW4-2=ON SW4-3=OFF	W1, W2, AUX	SW4-1=OFF SW4-2=ON SW4-3=OFF	Heat + AUX, AUX	1176
		Electric auxiliary heat module 3	5 kW, 8 kW	SW4-1=OFF SW4-2=ON SW4-3=ON	W1, W2, AUX	SW4-1=OFF SW4-2=ON SW4-3=ON	Heat + AUX, AUX	1112
		Cooling Turbo	—	SW3-4=ON	Y2/Y	—	Cool	1600
		Cooling High	—	SW3-4=OFF	Y2/Y	—	Cool	1441
		Cooling Medium	—	—	Y1	—	Cool	1265
		Cooling Low	—	—	—	—	Cool	1088
		Heat Pump Turbo	—	—	—	—	Heat	1471
		Heat Pump High	—	—	B+Y2/Y, W	—	Heat	1324
		Heat Pump Medium	—	—	Y1	—	Heat	1147
		Heat Pump Low	—	—	—	—	Heat	971
48K (4 Ton)	0 - 0.8 in. wc.	Electric auxiliary heat module 0 (Default)	20 kW	SW4-1=OFF SW4-2=OFF SW4-3=OFF	W1, W2, AUX	SW4-1=OFF SW4-2=OFF SW4-3=OFF	Heat + AUX, AUX	1741
		Electric auxiliary heat module 1	1 5 kW	SW4-1=OFF SW4-2=OFF SW4-3=ON	W1, W2, AUX	SW4-1=OFF SW4-2=OFF SW4-3=ON	Heat + AUX, AUX	1653
		Electric auxiliary heat module 2	1 0 kW, 8 kW	SW4-1=OFF SW4-2=ON SW4-3=OFF	W1, W2, AUX	SW4-1=OFF SW4-2=ON SW4-3=OFF	Heat + AUX, AUX	1559
		Electric auxiliary heat module 3	8 kW	SW4-1=OFF SW4-2=ON SW4-3=ON	W1, W2, AUX	SW4-1=OFF SW4-2=ON SW4-3=ON	Heat + AUX, AUX	1471
		Cooling Turbo	—	SW3-4=ON	Y2/Y	—	Cool	1800
		Cooling High	—	SW3-4=OFF	Y2/Y	—	Cool	1647
		Cooling Medium	—	—	Y1	—	Cool	1500
		Cooling Low	—	—	—	—	Cool	1235
		Heat Pump Turbo	—	—	—	—	Heat	1682
		Heat Pump High	—	—	B+Y2/Y, W	—	Heat	1582
		Heat Pump Medium	—	—	Y1	—	Heat	1359
		Heat Pump Low	—	—	—	—	Heat	1047
60K (5 Ton)	0 - 0.8 in. wc.	Electric auxiliary heat module 0 (Default)	25 kW	SW4-1=OFF SW4-2=OFF SW4-3=OFF	W1, W2, AUX	SW4-1=OFF SW4-2=OFF SW4-3=OFF	Heat + AUX, AUX	2171
		Electric auxiliary heat module 1	15 kW, 20 kW	SW4-1=OFF SW4-2=OFF SW4-3=ON	W1, W2, AUX	SW4-1=OFF SW4-2=OFF SW4-3=ON	Heat + AUX, AUX	2029
		Electric auxiliary heat module 2	10 kW, 15 kW	SW4-1=OFF SW4-2=ON SW4-3=OFF	W1, W2, AUX	SW4-1=OFF SW4-2=ON SW4-3=OFF	Heat + AUX, AUX	1894
		Electric auxiliary heat module 3	10 kW	SW4-1=OFF SW4-2=ON SW4-3=ON	W1, W2, AUX	SW4-1=OFF SW4-2=ON SW4-3=ON	Heat + AUX, AUX	1753

NOTE

The constant airflow volume motor is applied. So, the airflow volume is constant at all ESP within the stated range.

Table AP-2: 24 V Signal Chart

		24 V input terminal										
Mode	Priority	G	Y1	Y/Y2	B	W	W1	W2	E/AUX	DH	Fan speed	Display
OFF	/	0	0	0	0	0	0	0	0	*	OFF	00
FAN	7	1	0	0	*	0	0	0	0	*	Low	01
Cooling stage 1	6	*	1	0	0	0	0	0	0	1	Mid	02
Cooling stage 2		*	*	1	0	0	0	0	0	1	High	03
Dehumidification 1		*	1	0	0	0	0	0	0	0	Low	04
Dehumidification 2		*	*	1	0	0	0	0	0	0	Low	05
Heat pump stage 1	5	*	1	0	1	0	0	0	0	1	Mid	06
Heat pump stage 2		*	*	1	1	0	0	0	0	1	High	07
Heat pump stage 2		*	*	*	*	1	0	0	0	1	High	
Electric heater kit 1	3	*	0	0	*	0	1	0	0	*	Turbo	08
Electric heater kit 2		*	0	0	*	0	0	1	0	*	Turbo	
Electric heater kit 1 and kit 2		*	0	0	*	0	1	1	0	*	Turbo	09
Heat pump stage 1 + Electric heater kit 1	4	*	1	0	1	0	1	0	0	1	Turbo	10
Heat pump stage 1 + Electric heater kit 2		*	1	0	1	0	0	1	0	1	Turbo	
Heat pump stage 2 + Electric heater kit 1		*	*	1	1	0	1	0	0	1	Turbo	
Heat pump stage 2 + Electric heater kit 1		*	*	*	*	1	1	0	0	1	Turbo	
Heat pump stage 2 + Electric heater kit 2		*	*	1	1	0	0	1	0	1	Turbo	
Heat pump stage 2 + Electric heater kit 2		*	*	*	*	1	0	1	0	1	Turbo	
Heat pump stage 1 + Electric heater kit 1 and kit 2		*	1	0	1	0	1	1	0	1	Turbo	11
Heat pump stage 2 + Electric heater kit 1 and kit 2		*	*	1	1	0	1	1	0	1	Turbo	
Heat pump stage 2 + Electric heater kit 1 and kit 2		*	*	*	*	1	1	1	0	1	Turbo	
Emergency heat	1	*	*	*	*	*	*	*	1	*	Turbo	12
Heating zone control	2	*	1	0	1	0	*	*	0	0	Low	13
Heating zone control		*	*	1	1	0	*	*	0	0	Low	
Heating zone control		*	*	*	*	1	*	*	0	0	Low	

Note:
1: 24 V signal
0: No 24 V signal
*: 1 or 0.
The AHU will turn off if the 24 V input cannot meet the table.

Indoor Unit Diagnostic Guide

For ease of service, systems are equipped with diagnostic code display LEDs on the indoor and outdoor units. Outdoor diagnostics are displayed on the outdoor unit microprocessor board. The indoor unit may display a few error codes that might relate to the outdoor unit's problems. If possible, always check the diagnostic codes displayed on the indoor unit first. The diagnostic codes displayed on the outdoor units are listed in the outdoor unit manual.

Table AP-3: Indoor Unit Diagnostic Codes

Display	Error Information
EC07	ODU fan speed out of control
EC0d	ODU malfunction
EC51	ODU EEPROM parameter error
EC52	ODU coil temp. sensor (T3) error
EC53	ODU ambient temp. sensor (T4) error
EC54	COMP. discharge temp. sensor(TP) error
EC56	IDU coil outlet temp. sensor(T2B) errorMulti-zone)
ECC1	Other IDU refrigerant sensor detects leakage (Multi-zone)
EH00	IDU EEPROM malfunction
EH03	IDU fan speed out of control
EH0A	IDU EEPROM parameter error
EH0b	IDU main control board and display board communication error
EH0E	Water-level alarm malfunction
EH3A	External fan DC bus voltage is too low protection
EH3b	External fan DC bus voltage is too high fault
EH60	IDU room temp. sensor (T1) error
EH61	IDU coil temp. sensor(T2) error
EH62/EH66	Evaporator coil inlet temperature sensor T2B is in open circuit or short circuit
EH65	Evaporator coil temperature sensor T2A is in opencircuit or short circuit
EH6A	Communication malfunction between indoor unit and external fan module
EHC1	Refrigerant sensor detects leakage
EHC2	Refrigerant sensor is out of range and leakage is detected
EHC3	Refrigerant sensor is out of range
EL01	IDU & ODU communication error
EL0C	System lacks refrigerant
EL16	Communication malfunction between adapter board and outdoor main board
FHCC	Refrigerant sensor error
FL09	Mismatch between the new and old platforms
PC00	ODU IPM module protection
PC01	ODU voltage protection
PC02	Compressor top (or IPM) temp. protection
PC03	Pressure protection (low or high pressure)
PC04	Inverter compressor drive error
PC0L	Low ambient temperature protection
-- -- -- --	IDUs mode conflict(Multi-zone)

Installation Guide For AHU Using 115 V Power Supply

1. Open the upper cover.

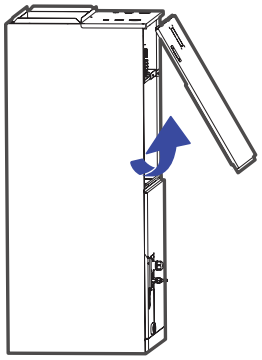

Fig. AP-1: Remove Upper Cover

2. When using a 115 V power supply, the fan motor wiring requires a 115 V fan motor pair plug. The white fan motor pair plug needs to be removed, and the red fan motor pair plug needs to be connected.

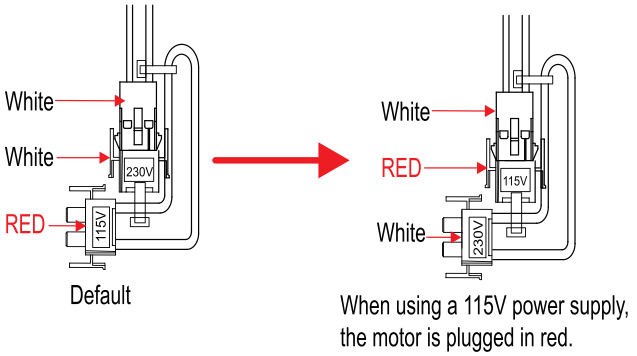

Fig. AP-2: Switch the Red Wire to 115 V

3. Unplug the temperature sensors T1, T2, T2A, and T2B, as well as the refrigerant detection sensor, electronic expansion valve (EEV), and the fan motor power pair plug (CN11) from the control board.
   T1: Indoor unit room temperature sensor (T1)
   T2: Indoor unit coil temperature sensor (T2)
   T2A: Evaporator coil temperature sensor (T2A)
   T2B: Evaporator coil inlet temperature sensor (T2B)

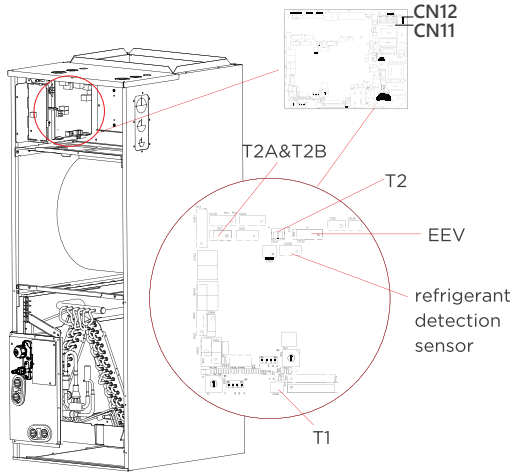

Fig. AP-3: Unplug Sensors From Contol Board

4. Remove the two screws in the electric cabinet and take out the control box.

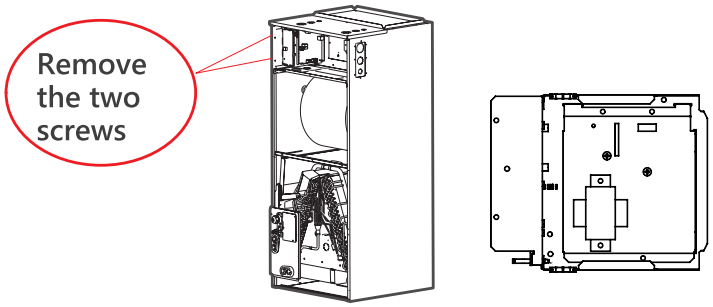

Fig. AP-4: Remove the Conrol Box

5. Remove the blue connector from the control board CN12 location.

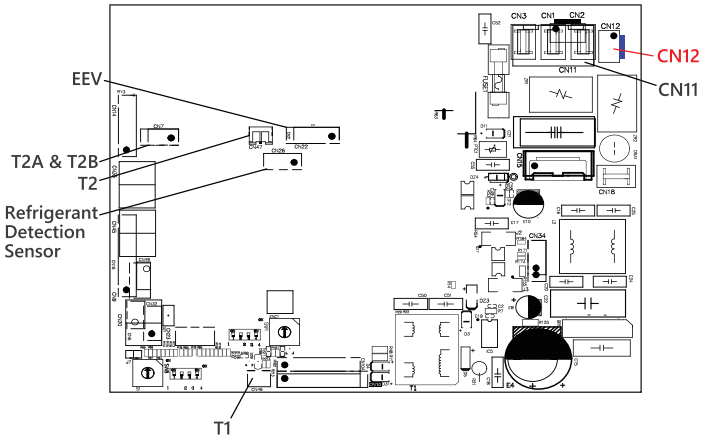

Fig. AP-5: Unplug CN12 Connector

6. Remove the red connector from the 24 V transformer.

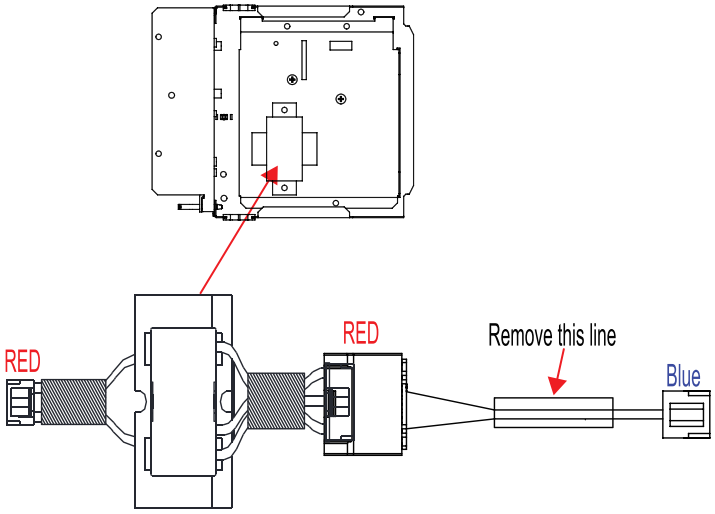

Fig. AP-6: Remove the Red Connector

7. Take the 24 V transformer connection wire out from the accessory package. Connect the red connector to the 24 V transformer and the blue connector to the control board CN12.

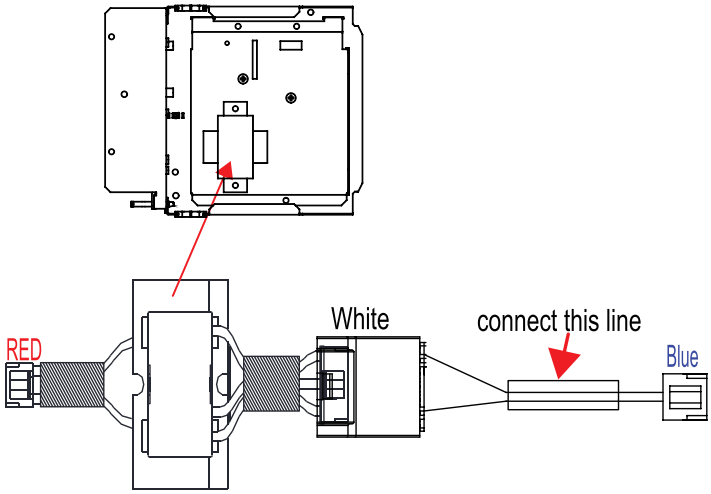

Fig. AP-7: Connect the Accessory Connection

8. Replace the electronic control box in the AHU, attach it with the screws that were removed in Step 4, and insert the wire body properly. Plug temperature sensors T1, T2, T2A, T2B, refrigerant detection sensor, electronic expansion valve (EEV), and fan motor power pair plug (CN11) from the control board.

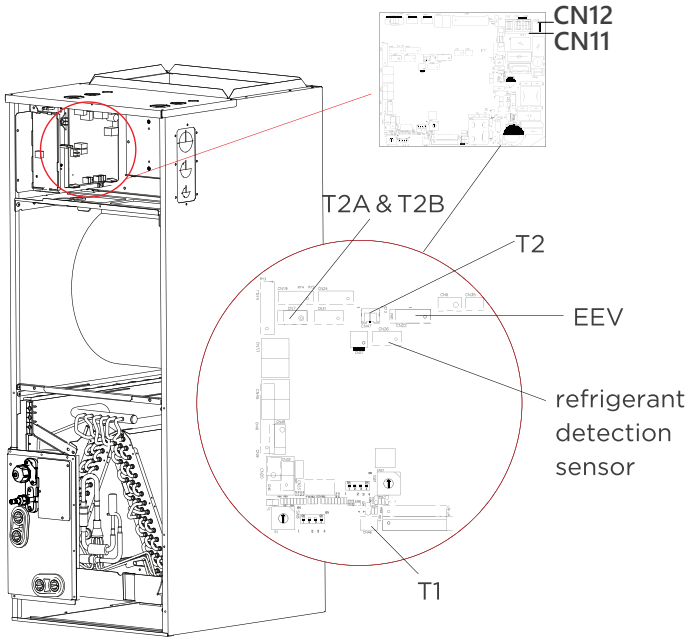

Fig. AP-8: Replace the Control Box and Reattach the Sensors

Installation Of Electric Auxiliary Heat Module

(Only for Heat Function Models)

NOTE

Installation must be performed by a licensed contractor. Please take necessary precautions when performing the installation operation.

Preparations for Installation

Before installation, please confirm that the electric auxiliary heat module and supplied accessories are complete and free of any damage. Do not attempt to install if damage is present.

Table AP-4: Electric Auxilary Heat Accessories

Name	Quantity
Manual	2
Foam gasket	1
Screws	7
Silicone breaker cover	1
Electric auxiliary heating wiring diagram	1
Circuit breaker label	1

For installations requiring supplemental heating, the optional Electric Auxiliary Heat Module is available in sizes from 3kW to 25kW to accommodate the appropriate size given the specific heat load and electrical requirements of each installation. Please refer to the table below for the selection of available sizes of each outdoor unit model, being sure to avoid improper matching.

Table AP-5: Model Size Selection Chart

Outdoor Unit Model (Btu/h)	3kW	5kW	8kW	10kW	15kW	20kW	25kW
18K	Y	Y	Y	Y	-	-	-
24K	-	Y	Y	Y	Y	-	-
30K	-	Y	Y	Y	Y	-	-
36K	-	Y	Y	Y	Y	Y	-
48K	-	-	Y	Y	Y	Y	-
60K	-	-	-	Y	Y	Y	Y

Electric Auxiliary Heat Module installation and Wiring Operation

1. Open the upper cover.

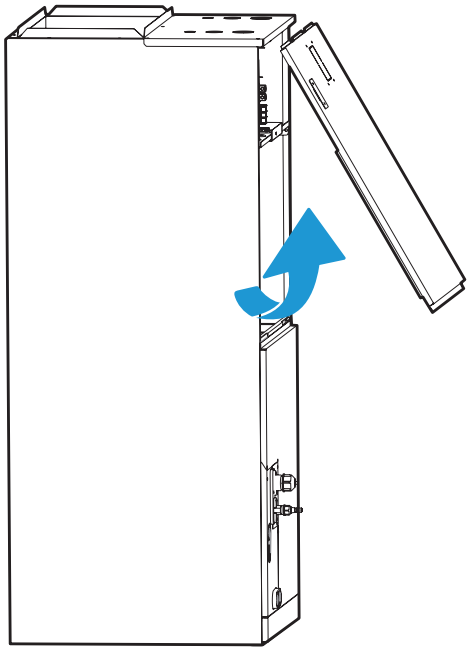

Fig. AP-9: Remove The Upper Cover

2. Use tools to remove the knock-out holes of the upper cover.

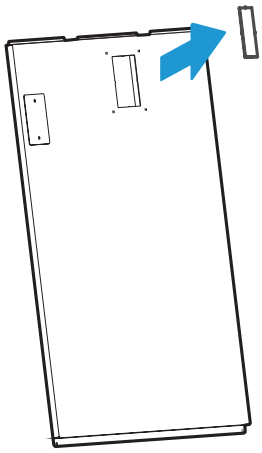

Fig. AP-10: Remove The Upper Cove Knockout

3. Remove the terminal block and power wires, loosen the screws, and remove the electric auxiliary heating cover.

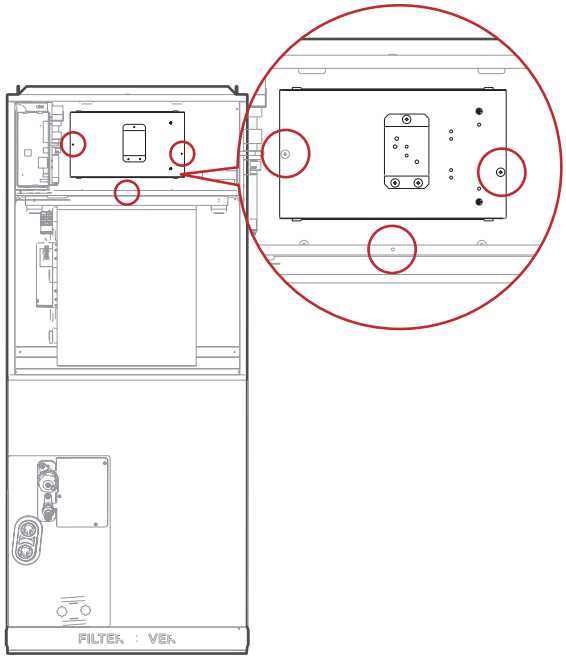

Fig. AP-11: Remove The Heating Cover

4. Install the electric auxiliary heating assembly in the front and note that the support assembly must lock into the support holes in the back of the cabinet.

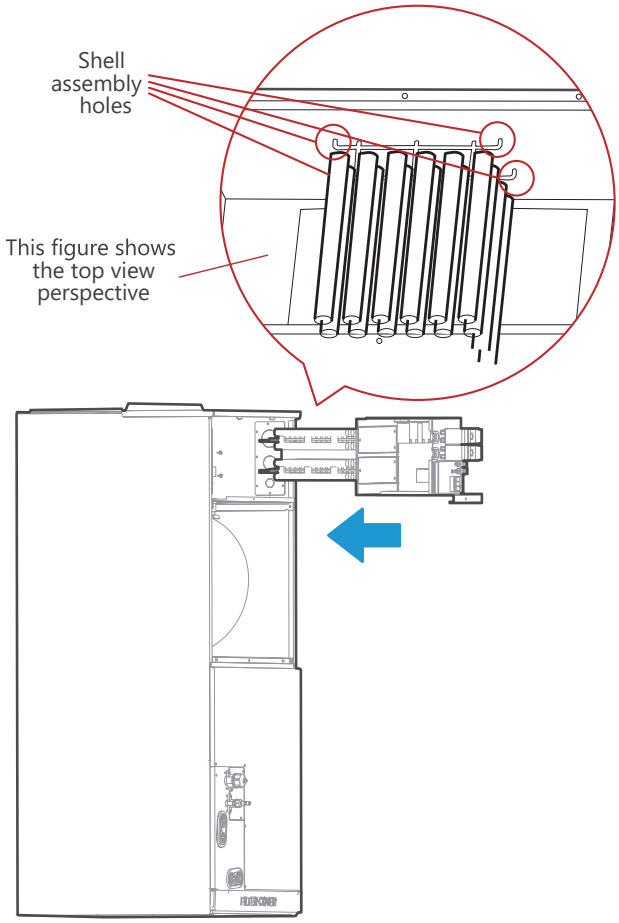

Fig. AP-12: Install The EAH Assembly

5. Tighten the mounting screws.

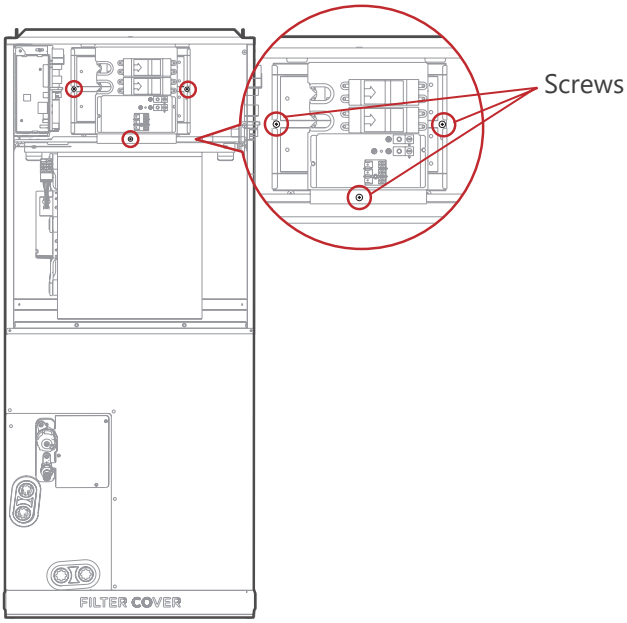

Fig. AP-13: Tighten The Screws

6. Wire according to the included wiring diagram.

Apply the wiring diagram to the inside cover wiring is completed for future reference and maintenance. Plug the electric heating plugs CN11 and CN12 into the main board.

7. Install the upper cover and the silicone breaker cover.

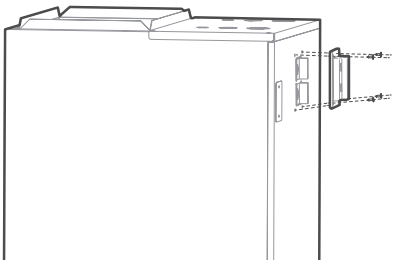

Fig. AP-14: Install The Breaker Cover

8. After installing the electric auxiliary heat module, apply the circuit breaker label near the silicone breaker cover that was just applied.

NOTE

The circuit breaker cannot be operated by the user.

Confirmation Of Indoor Unit

After the electric heating wiring is connected, please confirm before powering on:

- Check all wiring and ensure secure connection of all wiring.
- Ensure that the wire size is properly selected by NEC or local codes.

Table AP-8: Relay And Breaker Specifications

Heat Size	Number of circuit breakers	Number of Relays	Number of Power Cord Groups	Number of power cord grounding screws
3kW	1	1	2	2
5kW	1	1	2	2
8kW	1	2	2	2
10kW	1	2	2	2
15kW	2	3	3	3
20kW	2	4	3	3
25kW	3	5	4	4

NOTE

Electric auxiliary heating wiring diagram packed with the accessories.

If the branch circuit wire length exceeds 100 ft, consult NEC 210-19a to determine the maximum wire length. Use a 2% voltage drop.

Table AP-9: Electric Heat Kit Data

Heater Part No.	Heater KW	Internal Circuit Protection	Circuit 1 208/230 V			Circuit 2			Circuit 2		
			Heater Amps	MCA (1)	MOCP (2)	Heater Amps	MCA (1)	MOCP (2)	Heater Amps	MCA (1)	MOCP (2)
EAH-03E(UL)	3	Ckt Bkr	10.8/12	14/16	15/20	/	/	/	/	/	/
EAH-05E(UL)	5	Ckt Bkr	18/20	23/27	25/30	/	/	/	/	/	/
EAH-08E(UL)	8	Ckt Bkr	28.8/32	37/42	40/45	/	/	/	/	/	/
EAH-10E(UL)	10	Ckt Bkr	36/40	46/53	50/60	/	/	/	/	/	/
EAH-15E(UL)	15	Ckt Bkr	18/20	23/27	25/30	36/40	46/53	50/60	/	/	/
EAH-20E(UL)	20	Ckt Bkr	36/40	46/53	50/60	36/40	46/53	50/60	/	/	/
EAH-25E(UL)	25	Ckt Bkr	18/20	23/27	25/30	36/40	46/53	50/60	36/40	46/53	50/60

Trademarks Copyrights & Legal Statement

Midea logo, word marks, trade name, trade dress, and all versions thereof are valuable assets of Midea Group and/or its affiliates (“Midea”), to which Midea owns trademarks, copyrights, and other intellectual property rights, and all goodwill derived from using any part of a Midea trademark. Use of Midea trademark for commercial purposes without the prior written consent of Midea may constitute trademark
infringement or unfair competition in violation of relevant laws.

This manual is created by Midea and Midea reserves all copyrights thereof. No entity or individual may use, duplicate, modify, distribute in whole or in part this manual, or bundle or sell with other products without the prior written consent of Midea.

All the functions and instructions described were up to date at the time of printing this manual. However, the actual product may vary due to improved functions and designs.

Disposal and Recycling

This symbol indicates that this product shall not be disposed of with other household waste at the end of its service life. Used devices must be returned to an official collection point for recycling of electrical electronic devices. To find these collection systems please contact your local authorities or retailer where the product was purchased. Each household performs an important role in recovering and recycling old appliances. Appropriate disposal of used appliances helps prevent potential negative consequences for the environment and human health.

Data Protection Notice

For the provision of the services agreed with the customer,
we agree to comply without restriction with all stipulations of applicable data protection law, in line with agreed countries within which services to the customer will be delivered, as well as, where applicable.

Generally, our data processing is to fulfill our obligation under contract with you and for product safety reasons, to safeguard your rights in connection with warranty and product registration questions. In some cases, but only if appropriate data protection is ensured, personal data might be transferred to recipients located outside of the European Economic Area.

Further information is provided upon request. You can contact our Data Protection **MideaDPO@midea.com**. To exercise your rights such as the right to object to your personal data being processed for direct marketing purposes, please contact us via **MideaDPO@midea.com**. To find further information, please follow the QR Code.

North American HVAC Products Ltd.

Add.: #100 5118 N Fraser Wy, Burnaby, BC V5J 0H1

Tel: 604-430-8496 info@nahvac.com www.nahvac.com

Midea reserves the right to change the specifications of the product, and to withdraw or replace products without prior notification or public announcement.
Midea is constantly developing and improving its products.